SHARP SERVICE MANUAL

SERVICE MANUAL

VIDEO CASSETTE RECORDER

MODELS VC-A382U/A582U/A5833U/H982U/H9833U/H983U

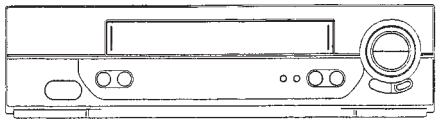

VC-A382U/A582U/A5833U

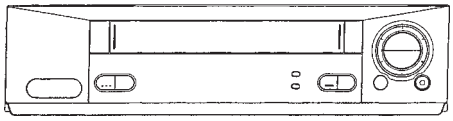

VC-H982U/H983U

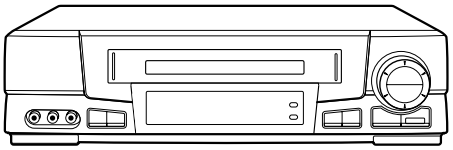

VC-H9833U

VHS VIDEO CASSETTE RECORDER

MODELS VC-A382U VC-A582U VC-A5833U VC-H982U VC-H9833U VC-H983U

In the interests of user-safety (Required by safety regulations in some countries) the set should be restored to its original condition and only parts identical to those specified be used.

CONTENTS

Page
1. GENERAL INFORMATION 5
1-1 FEATURES 5
1-2 SPECIFICATIONS 5
1-3 LOCATION OF MAJOR COMPONENTS AND CONTROL 6
2. DISASSEMBLY AND REASSEMBLY 7
2-1 DISASSEMBLY OF MAJOR BLOCKS 7
2-2 DISASSEMBLING THE MECHANISM/ MAIN PWB ASSEMBLY 8
2-3 CARES WHEN REASSEMBLING 9
3. FUNCTION OF MAJOR MECHANICAL PARTS 10
4. ADJUSTMENT, REPLACEMENT AND ASSEMBLY OF MECHANICAL UNITS 10
4-1 MECHANISM CONFIRMATION ADJUSTMENT JIG 12
5. ELECTRICAL ADJUSTMENT 31
5-1 ADJUSTMENT OF HEAD SWITCHING POINT 32
5-2 ADJUSTMENT OF FV (False Vertical Sync) OF STILL PICTURE 32
5-3 CHECKING OF OFF TRACK 32
5-4 ADJUSTMENT OF SIF-INPUT LEVEL 33
5-5 ADJUSTMENT OF FILTER 33
5-6 ADJUSTMENT OF STEREO VCO 33
5-7 ADJUSTMENT OF STEREO SEPARATION 33
6. MECHANISM OPERATION FLOWCHART AND TROUBLESHOOTING GUIDE 34
7. TROUBLESHOOTING 40
8. BLOCK DIAGRAM 51
9. SCHEMATIC DIAGRAM AND PWB FOIL PATTERN 61
10. REPLACEMENT PARTS LIST 89
11. EXPLODED VIEW OF MECHANICAL PARTS 101
12. PACKING OF THE SET 107

VC-A382U.....MODEL for USA/CANADA
VC-A582U/A5833U/H982U/H9833U/H983U.....MODELS for CANADA

SHARP CORPORATION

This document has been published to be used for after sales service only.
The contents are subject to change without notice.

IMPORTANT SERVICE NOTES

BEFORE RETURNING THE VIDEO CASSETTE RECORDER

Before returning the video cassette recorder to the user, perform the following safety checks.

1. Inspect all lead dress to make certain that leads are not pinched or that hardware is not lodged between the chassis and other metal parts in the video cassette recorder.
2. Inspect all protective devices such as non-metallic control knobs, insulation materials, cabinet backs, adjustment and compartment covers or shields, isolation resistor/capacitor networks, mechanical insulators etc.
3. To be sure that no shock hazard exists, check for current in the following manner.

- Plug the AC line cord directly into a 120 volt AC outlet (Do not use an isolation transformer for this test).
- Using two clip leads, connect a 1.5k ohm, 10 watt resistor paralleled by a 0.15µF capacitor in series with all exposed metal cabinet parts and a known earth ground, such as a water pipe or conduit.
- Use an SSVM or VOM with 1000 ohm per volt, or higher, sensitivity or measure the AC voltage drop across the resistor (See Diagram).
- Move the resistor connection to earth exposed metal part having a return path to the chassis (antenna, metal cabinet, screw heads, knobs and control shafts, etc.) and measure the AC voltage drop across the resistor. Reverse the AC plug on the set and repeat AC voltage measurements for each exposed part. Any reading of 0.45V rms (this corresponds to 0.3mA rms AC.) or more is excessive and indicates a potential shock hazard which must be corrected before returning the video cassette recorder to the owner.

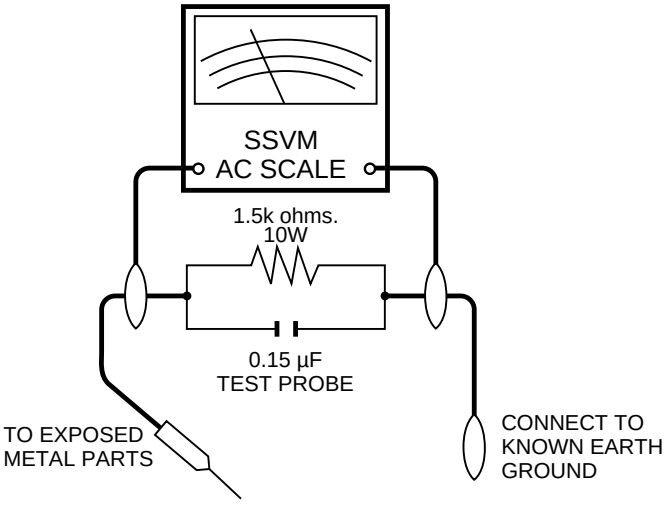

WARNING : TO REDUCE THE RISK OF FIRE OR ELECTRIC SHOCK, DO NOT EXPOSE THIS APPLIANCE TO RAIN OR MOISTURE.

CAUTION

RISK OF ELECTRIC SHOCK
DO NOT OPEN

CAUTION: TO REDUCE THE RISK OF ELECTRIC SHOCK. DO NOT REMOVE COVER. NO USER-SERVICEABLE PARTS INSIDE. REFER SERVICING TO QUALIFIED SERVICE PERSONNEL.

This symbol warns the user of uninsulated voltage within the unit that can cause dangerous electric shocks.

This symbol alerts the user that there are important operating and maintenance instructions in the literature accompanying this unit.

CAUTION:

1.6A 125V

This symbol mark means fast operating fuse.
For continued protection against risk of fire, replace only with same type fuse F901 (1.6A, 125V).

NOTES DE SERVICE IMPORTANTES

AVANT DE RENDRE LE MAGNETOSCOPE

Avant de rendre le magnétoscope à l'utilisateur, effectuer les vérifications de sécurité suivantes.

1. Vérifier toutes les gaines de fil pour être sûr que les fils ne sont pas pincés ou que le matériel n'est pas coincé entre le châssis et les autres pièces métalliques dans le magnétoscope.
2. Vérifier tous les dispositifs de protection tels que les boutons de commande non métalliques, les matériaux d'isolement, le dos du coffret, les couvercles de compartiment et ajustement ou les boucliers, les réseaux de résistance / condensateur d'isolement, les isolateurs mécaniques, etc.
3. Pour être sûr qu'il n'y a aucun risque de choc électrique, vérifier le courant de fuite de la maniére suivante.

- Brancher le cordon d'alimentation secteur directement dans une prise de courant de 120 volts. (Ne pas utiliser de transformateur d'isolement pour cet essai).
- Utiliser deux fils à pinces et connecter une résistance de 10 watts 1,5 kohm en parallèle avec un condensateur de 0,15 µF en série avec des pièces du coffret métallique exposées et une masse de terre connue telle qu'un tuyau ou un conduit d'eau.
- Utiliser un VTVM ou VOM avec une sensibilité de 1000 ohms par volt ou plus ou mesurer la chute de tension CA entre la résistance (voir diagramme).
- Déposer la connexion de la résistance à toutes les pièces métalliques exposées ayant un parcours de retour au châssis (connexions d'antenne, coffret métallique, tétes de vis, boutons et arbres de commande, etc.) et mesurer la chute de tension CA entre la résistance. Inverser la fiche CA (une fiche intermédiaire non polarisée doit être utilisée à seule fin de faire ces vérifications.) sur l'appareil et répéter les mesures de tension CA pour chaque piéce métallique exposée. Toute lecture de 0,45 Vrms (ceci correspond à 0,3 mArms CA) ou plus est excessive et signale un danger de choc qui doit être corrigé avant de rendre le magnétoscope à son utilisateur.

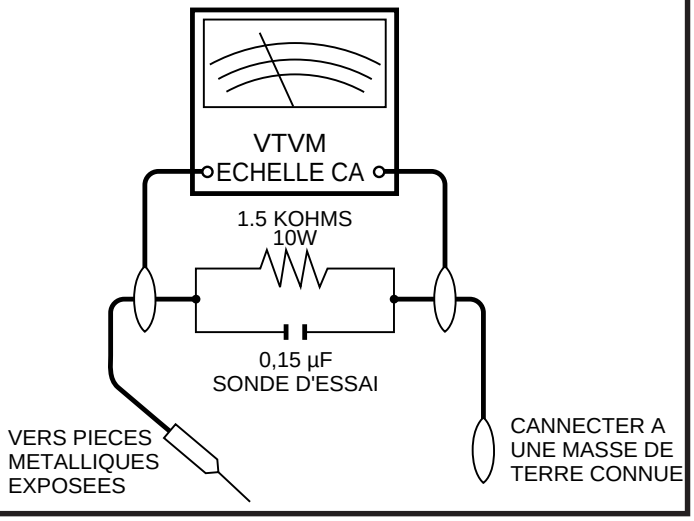

ATTENTION: POUR REDUIRE LES RESQUES D'INCENDIE OU DE CHOC ELECTRIQUE, NE PAS EXPOSER CET APPAREIL A LA PLUIE OU A L'HUMIDITE.

ATTENTION

RISQUE DE CHOC ELECTRIQUE
NE PAS OUVRIR

ATTENTION: AFIN DE REDUIRE LES RISQUES DE CHOC ELECTRIQUE, NE PAS RETIRER LE COUVERCLE, AUCUN ORGANE INTERNE NE PEUT ETRE REPARE PAR L'UTILISATEUR. CONFIER L'APPAREIL A UN DEPANNEUR QUALIFIE.

Ce symbole signale à l'utilisateur la présence d'une tension non isolée à l'intérieur de l'appareil qui peut être la cause de secousses électriques dangereuses.

Ce symbole avertit l'utilisateur que des instructions importantes relatives à l'utilisation et àl'entretien se trouvent dans le manuel accompagnant l'appareil.

PRECAUTION:

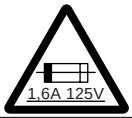

Cette marque indique le fusible à action in stantansée. Pour la protection continue contre le risque d'incendie, ne remplacer que par le fusible type F901 (1,6A, 125V).

PRECAUTIONS IN PART REPLACEMENT

When servicing the unit with power on, be careful to the section marked white all over.
This is the primary power circuit which is live.

When checking the soldering side in the tape travel mode, make sure first that the tape has been loaded and then turn over the PWB with due care to the primary power circuit.
Make readjustment, if needed after replacement of part, with the mechanism and its PWB in position in the main frame.

(1) Start and end sensors: Q701 and Q702

Insert the sensor's projection deep into the upper hole of the holder. Referring to the PWB, fix the sensors tight enough.

(2) Photocoupler: IC901

Refer to the symbol on the PWB and the anode marking of the part.

(3) Cam switches A and B: D708 and D709.

Adjust the notch of the part to the white marker of the symbol on the PWB. Do not allow any looseness.

(4) Take-up and supply sensors: D707 and D706.

Be careful not to confuse the setting direction of the parts in reference to the symbols on the PWB. Do not allow any losseness.

1. GENERAL INFORMATION

1-1 FEATURES

Common Features

- **360 x Rewind Speed to Fast forward and Rewind.**
- **EZ Set Up**
- **HQ System for Better Resolution and Color Reproduction**
- **Multi-Language (English/Spanish/French) OSD (On Screen Display) with Menu Screen Guidance**
- **181-channel PLL Quartz Synthesized Random Access Tuner with Automatic Channel Setting**
- **Quick Start with Full Loading Mechanism**
- **1-Year, 8-Event Programmable Timer**
- **Simple Recording Timer**
- **Universal Remote Control**
- **Sharp Super Picture**
- **Field-Still/Variable Slow/Frame Advance**
- **Real-Time Counter**
- **Automatic Daylight Saving-Time (D.S.T.) Adjustment**
- **Blue Screen Noise Elimination**
- **Auto Tracking Control System**
- **Digital Program Search System (DPSS)**
- **Skip Search**
- **Instant Replay**
- **Auto Zero Back**
- **Auto Repeat**
- **Full Automatic Playback**
- **Tamper Proof**
- **Up to 8 Hours of Recording and Playback (with T-160 cassette)**
- **Built-in Shuttle Control System**

Only for VC-A5833U, VC-H9833U

- **Auto VIEWCAM Dubbing function**
- **Built-in Front AV Jacks**

Only for VC-A5833U, VC-H983U, VC-H9833U

- **Automatic Head Cleaning System**

Only for VC-H983U

- **Universal Remote Control with light up buttons**

Except for VC-A382U

- **Double-Azimuth 4-Heads**
- **19μ Clear Picture System (in EP mode)**

Only for VC-H982U, VC-H983U, VC-H9833U

- **VHS Hi-Fi Stereo Sound**
- **Built-in MTS (Multi-channel TV Sound) Decoder**

1-2 SPECIFICATIONS

1) Recording system

Format:	VHS NTSC Standard
Luminance signal:	FM recording
Chroma signal:	Low frequency converted direct recording
Color system:	NTSC
Number of video head:	2 (VC-A382U) 4 (VC-A582U/A5833U/H982U/H983UH9833U)
Tape speed:	(SP) 33.35 mm/sec (LP) 16.67 mm/sec (playback only) (EP) 11.12 mm/sec

2) Video signal

Input level:	0.5 ~ 2.0 Vp-p, 75 ohm unbalanced
Output level:	1.0 Vp-p, 75 ohm unbalanced
Horizontal resolusion:	220 lines (SP mode)
Signai to noise ratio:	45dB (SP mode)

3) Audio signal

Input level:	– 8 dBs (309mVrms, 47k ohm)
Output level:	– 8 dBs (309mVrms, 1k ohm)
Frequency response:	80Hz ~ 10kHz (SP mode linear), 20Hz ~ 20kHz (Hi-Fi mode)
Signal to noise ratio:	43dB (SP mode linear)
Hi-Fi dynamic range:	90dB (VC-H982U/H983U/H9833U)
Wow and flutter:	0.005% max. (Hi-Fi mode) with T-120 tape

4) Receiving channel

VHF:	Channels 2 ~ 13
UHF:	Channels 14 ~ 69
CATV:	Channels A-8, A-5 ~ W + 84
Antenna Input Impedance:	VHF/UHF; 75 ohm

5) Misc.

Fast forward /Rewind time:	Approximate 1 minute with T-120 cassette
Power source:	120 V AC, 60 Hz
Power consumption:	20 W
Allowable ambient temperature:	with T-120 tape 5°C to 40°C (41°F to 104°F)
Operating humidity:	below 80% RH
Dimensions:	360 (W), 92 (H), 261 (D) mm(14-3/16, 3-5/8, 10-9/32 inch) (VC-A382U/A582U/A5833U/H982U/H983U) 360 (W), 92 (H), 256 (D) mm(14-3/16, 3-5/8, 10-5/64 inch) (VC-VC-H9833U)
Weight:	2.7 kg (6.0 lbs)
Accessories included:	75 ohm coaxial cable,Opetation manual, Registration card Infrared remote control, Battery (2 pcs.)
Note:	Specifications may be changed for improvement without notice.

Major Components of Your VCR

[Front]

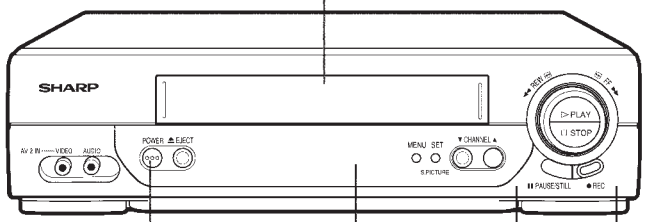

Cassette compartment (see **Playback/Recording**)

(VC-A5833U)

POWER button
(When pressed to turn on the VCR, some indicators on the Multi-Function display light up, and the Multi-Function display brightens. When the power is turned off, the Multi-Function display dims.)

Basic function controls (see **Playback/Recording**)

NOTE
- The design may be slightly different depending on the model.

Multi-Function Display (explained throughout the operation instructions)

Display	Symbol	Function Status	Display	Symbol	Function Status
STOP	—	Stop	FF	—	Fast forward
PLAY	▶	Play	REW	—	Rewind
PLAY	▶	Video Search, Slow, Still, Frame Advance	PAUSE	REC	Rec Pause
REC	REC	Record	—		Cassette-in

NOTE
- The display will return to the original mode (counter or clock display) 3 seconds after the VCR enters the operation mode.

[Rear]

(VC-A382U, VC-A582U, VC-A5833U)

Connection terminals (see **Connecting the VCR** and **Cable TV Connections**)

Connection terminals (see **Tape Dubbing**)

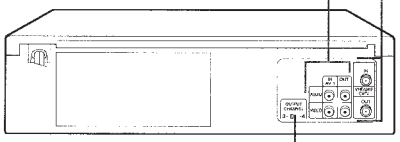

3 ↔ 4 OUTPUT CHANNEL selector
(see **Setting the 3 ↔ 4 Output Channel Selector**)

(VC-H982U, VC-H983U, VC-H9833U)

Connection terminals (see **Connecting the VCR** and **Cable TV Connections**)

Connection terminals (see **Tape Dubbing**)

3 ↔ 4 OUTPUT CHANNEL selector
(see **Setting the 3 ↔ 4 Output Channel Selector**)

Remote Control

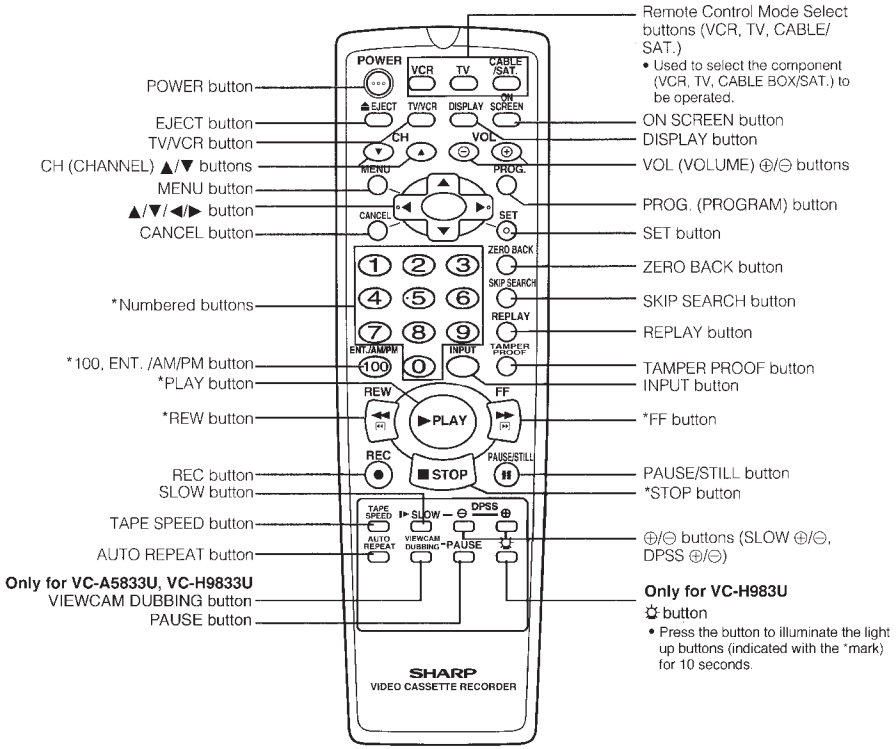

NOTE

Only for VC-H983U

If the button is pressed while the light up buttons are illuminated, they will remain illuminated for an additional 10 seconds.

Inserting the Batteries

Make sure that the batteries have been properly installed first. Fit two batteries type "AA". If the remote control stops working, fit new batteries.

Ensure the batteries are fitted correctly, matching the polarities (⊕/⊖) indicated in the remote control.

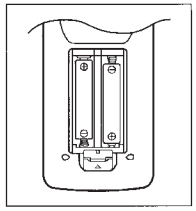

NOTE

Only for VC-H983U
- **The operating life of the batteries will shorten if the Light Up function is frequently used.**
- **After changing the batteries in the remote control, the code settings for the TV, cable box and Digital Satellite Receiver must be re-entered.**
- Do not subject the remote control to shock, water or excessive humidity.
- The remote control may not function if the VCR sensor is in direct sunlight or any other strong light.
- Incorrect use of batteries may cause them to leak or burst. Read the battery warnings and use the batteries properly.
- Do not mix old and new batteries, or mix brands in use.
- Remove the batteries if the remote control will not be operated for an extended period of time.
- If the remote control does not function properly when new batteries are installed, remove the batteries and wait 5 minutes before re-installing them.

2. DISASSEMBLY AND REASSEMBLY

2-1 DISASSEMBLY OF MAJOR BLOCKS

TOP CABINET : Remove 3 screws ①.

FRONT PANEL : Remove shuttle switch knob ②. Remove 2 screw ③ and 7 clips ④.

OPERATION (SHUTTLE JOG) PWB : Remove 1 screw ⑤. Take it out of connector ⑥.

DRUM SHIELD : Remove 1 screw ⑪ with drum shield.

MECHANISM/ MAIN PWB : Remove 2 screws ⑦, 1 screw ⑧, 1 screw ⑨. Remove 1 screw ⑩ with antenna terminal cover.

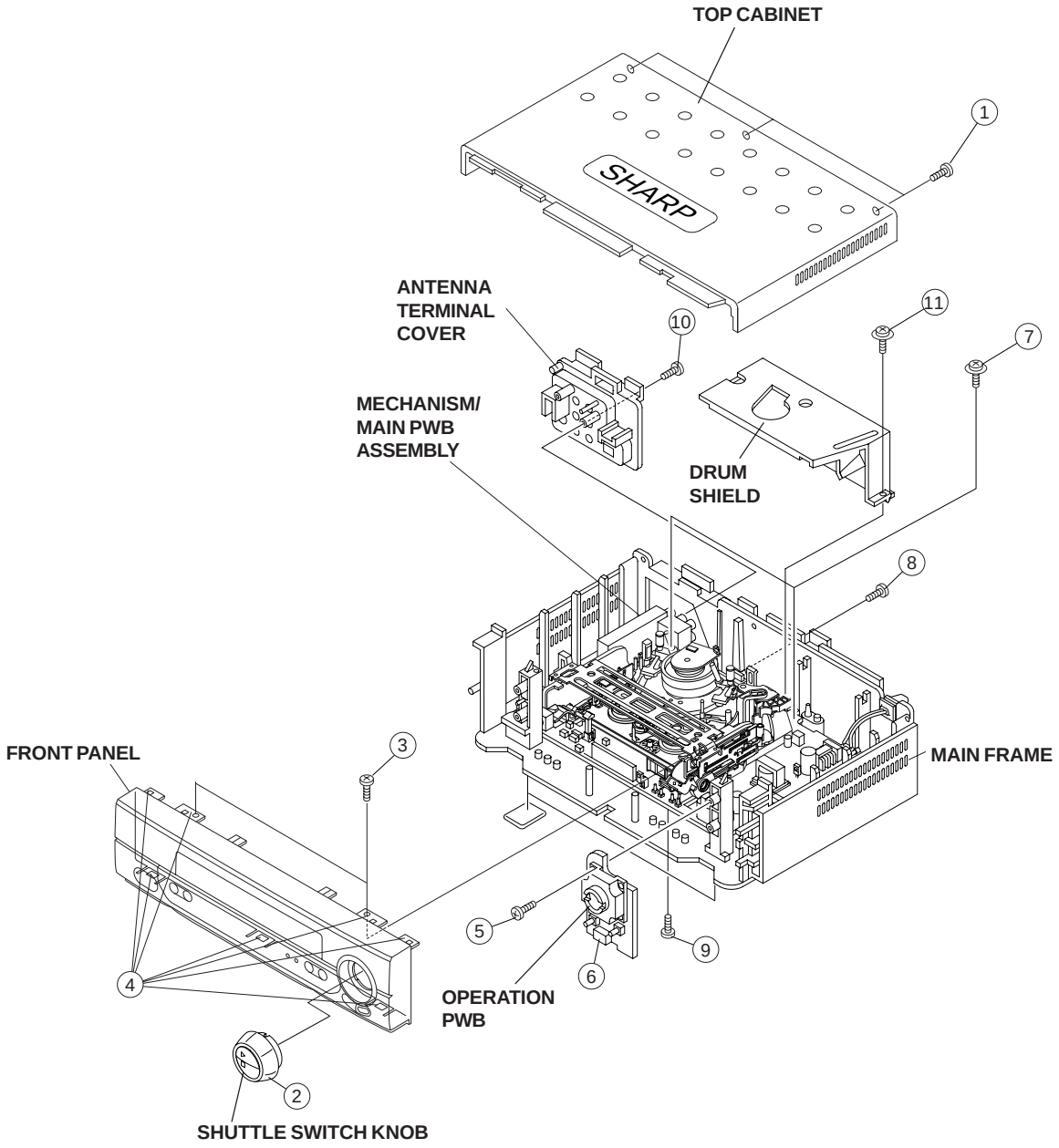

2-2 DISASSEMBLING THE MECHANISM/MAIN PWB ASSEMBLY

1. When removing the mechanism from the main PWB, remove the antenna cover 1 screw ①, and remove the antenna cover.
   Remove the PWB bottom plate 1 screw ②.
   Remove the FFC cable (AA, AD, AH) ③ which connects the PWB and the mechanism.
   Take out vertically the mechanism so that it does not damage the adjacent parts.

2. Removing the mechanism and cassette controller
   Remove 2 screws ④ fixing the cassette controller to the mechanism, and remove the cassette controller.

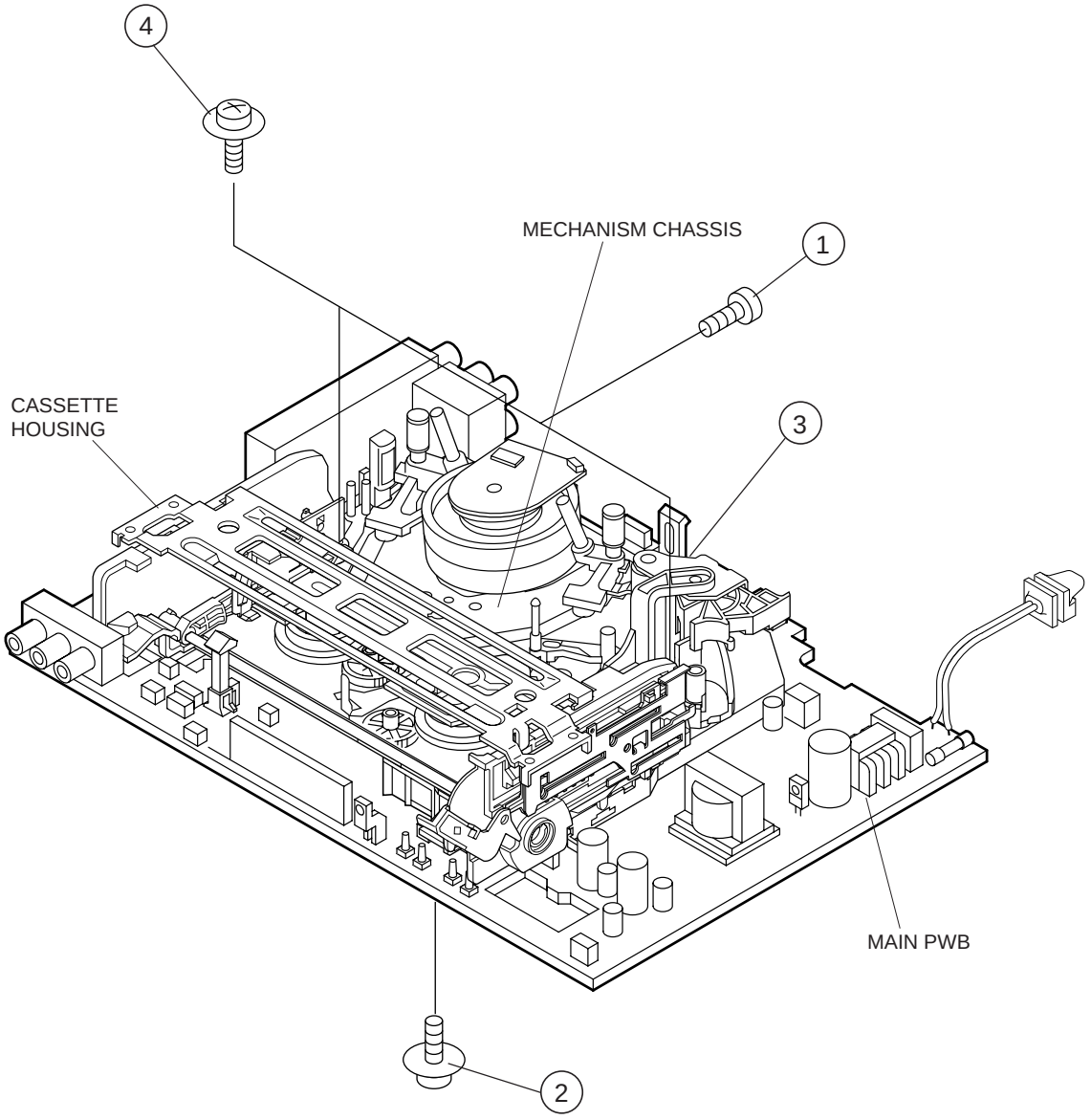

2-3 CARES WHEN REASSEMBLING

INSTALLING THE CASSETTE CONTROLLER

When the cassette controller is installed on the mechanism, the initial setting is essential condition.
There are two initial setting methods, namely electrical and mechanical.

1. Electrical initial setting

So as to perform initial setting of mechanism execute the Step 1 of Installation of cassette housing. After ascertaining the return to the initial setting position (*1) install the cassette controller. (Conditions: When mechanism and PWB have been installed)

2. Mechanical initial setting

Feed the pulley feed gear of loading motor with screw driver. After ascertaining the return to the initial set position (*1) install the cassette controller in the specified position. (This method is applied only for the mechanism.)

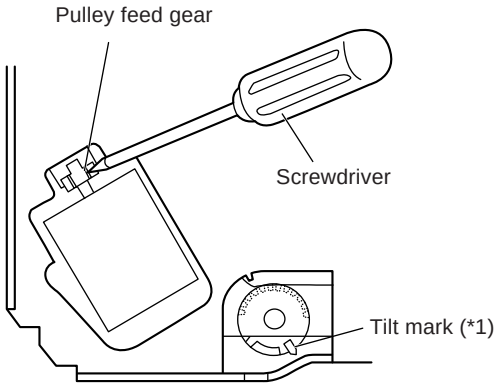

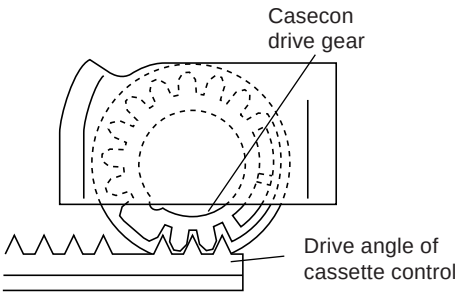

INSTALLING THE MECHANISM ON PWB

Lower vertically the mechanism, paying attention to the mechanism edge, and install the mechanism with due care so that the parts are not damaged. So as to fix the mechanism to the main PWB install two housings. (Fit the antenna cover to one of them. For other, fix the vicinity of loading motor and solder joint side of main PWB.) Connect again the FFC cable (AA-MH, AD-ME, AH-MH) between the mechanism and the main PWB.

PARTS WHICH NEED PARTICULAR CARE

When installing the mechanism chassis on the PWB unit, take care so as to prevent deformation due to contact of mechanism chassis with REC TIP SW.

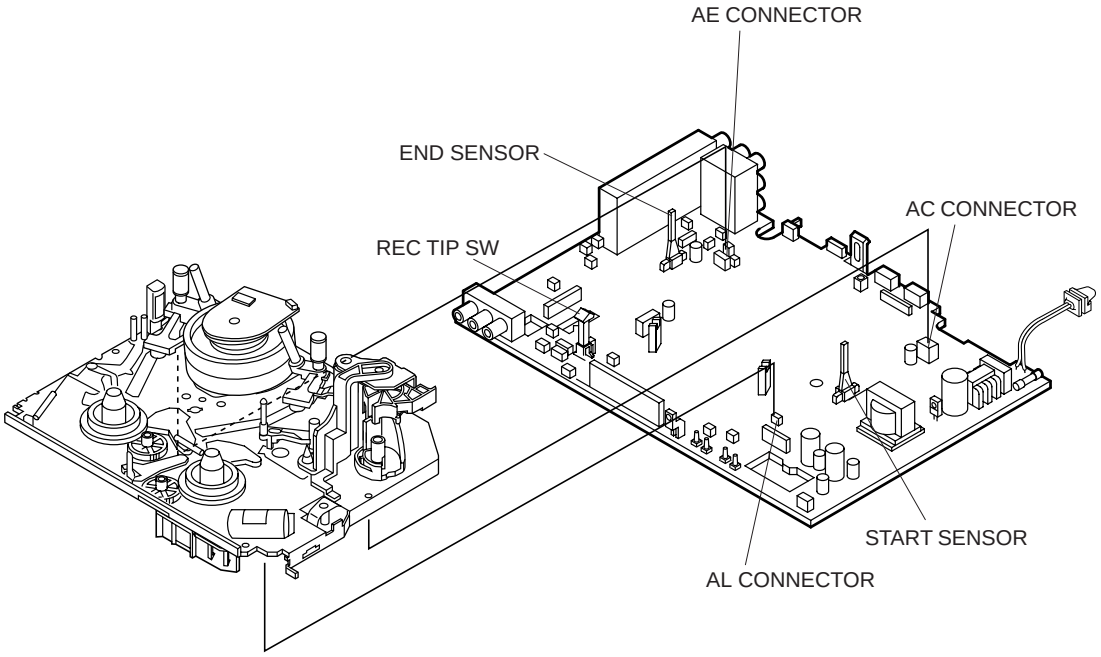

3. FUNCTION OF MAJOR MECHANICAL PARTS (TOP VIEW)

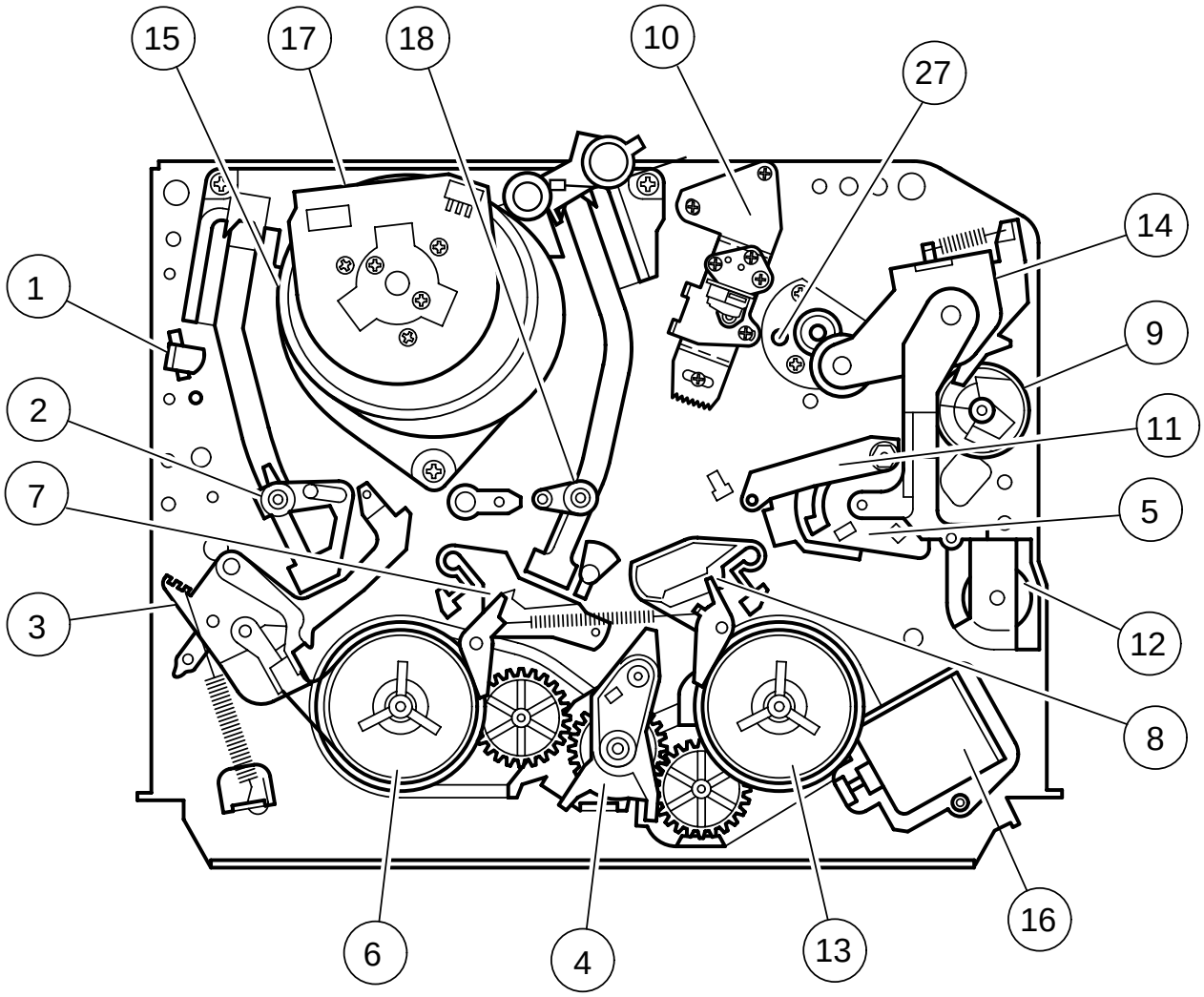

No.	Function	No.	Function
1	Full erase head	8	Tu main brake
2	Sup pole base ass'y	9	Pinch drive cam
3	Tension arm	10	A/C Head ass’y
4	Idler ass’y	11	Reverse guide
5	Pinch drive lever ass’y	12	Casecon drive gear
6	Supply reel disk	13	Take-up reel disk
7	Sup main brake	14	Pinch roller lever ass’y

FUNCTION OF MAJOR MECHANICAL PARTS (BOTTOM VIEW)

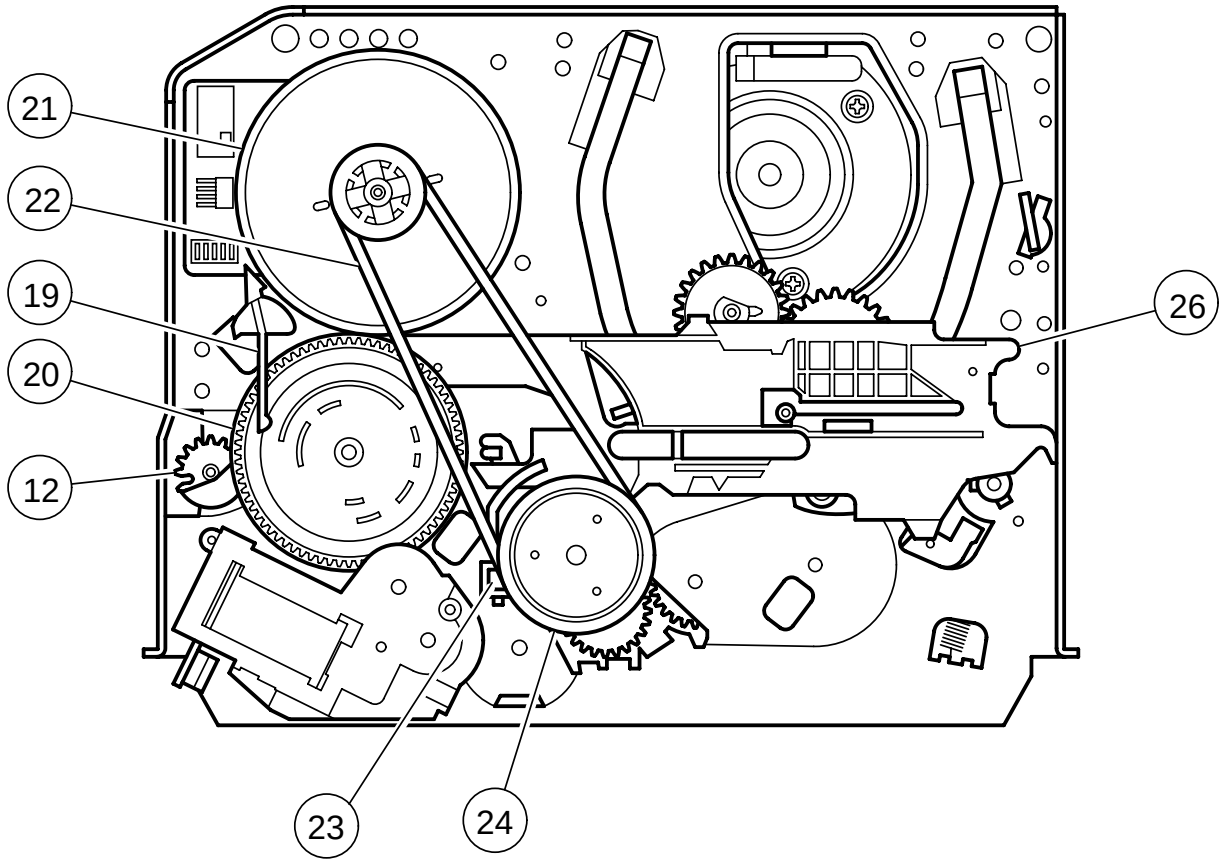

No.	Function	No.	Function
15	drum ass’y	22	Reel belt
16	Loading motor	23	Clutch lever
17	Drum motor	24	Limiter pulley ass'y
18	Tu pole base ass’y	26	Shifter
19	Slow brake	27	Fixing guide
20	Master cam		
21	Capstan D.D. motor		

4. MECHANISM ADJUSTMENT, REPLACEMENT, ASSEMBLING AND CLEANING METHODS

The explanation given below relates to the on-site general service (field service) but it does not relates to the adjustment and replacement which need high-grade equipment, jigs and skill. For example, the drum assembling, replacement and adjustment service must be performed by the person who have finished the technical courses.

4-1 MECHANISM CONFIRMATION ADJUSTMENT JIG

So as to perform completely the mechanism adjustment prepare the following special jigs. So as to maintain the initial performance of the machine the maintenance and check are necessary. Utmost care must be taken so that the tape is not damaged. If adjustment needs any jig, be sure to sue the required jig.

No.	Jig Item	Part No.	Code	Configuration	Remarks
1.	Torque Cassette Meter	JiGVHT-063	CZ		This cassette torque meter is used for checking and adjusting the torque of take-up for measuring tape back tension.
2.	Torque Gauge	JiGTG0090	CM		These Jigs are used for checking and adjusting the torque of take-up and supply reel disks.
		JiGTG1200	CN		
3.	Torque Gauge Head	JiGTH0006	AW		
4.	Torque Driver	JiGTD1200	CB		When fixing any part to the threaded hole using resin with screw, use the jig. (Specified torque 5 kg)
5.	Master Plane Jig and Reel Disk Height Adjusting Jig	JiGRH0002	BR		These Jigs are used for checking and adjusting the reel disk height.
		JiGMP0001	BY		
6.	Tension Gauge	JiGSG2000	BS	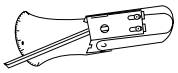	There are two gauges used for the tension measurements, 300 g and 2.0kg.
		JiGSG0300	BF		
7.	Pinch pressing force measuring jig	JiGADP003	BK		This Jig is used with the tension gauge. Rotary transformer clearance adjusting jig.
8.	Reverse guide height adjusting box driver	JiGDRiVER11055	AR	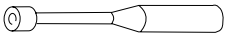	This Jig is used for height adjustment of the reverse guide (for reverse guide height adjustment).
9.	Alignment Tape				These tapes are especially used for electrical fine adjustment.
					Video / Audio / HiFi Audio / Track
		VROATSV	CD		525 Monoscope / 7k / — / 58μm
					NTSC Color Bar / 1k / — / 58μm
		VROBBZGS	CB		525 Monoscope / 7k / — / 30μm
		VROEFZCS	BG		Black Level (only SYNC) signal / 1k / — / 19μm
10.	Guide roller height adjustment drive	JiGDRiVERH-4	AP	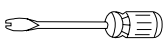	This screwdriver is used for adjusting the guide roller height.
11.	X value adjustment gear type screw driver	JiGDRiVER-6	BM	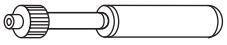	For X value adjustment
12.	Reverse Guide Height Adjusting Jig	JiGRVGH-F18	BU		This Jig is used for height adjustment of the reverse guide.

MAINTENANCE CHECK ITEMS AND EXECUTION TIME

Perform the maintenance with the regular intervals as follows so as to maintain the quality of machine.

Parts \ Maintained	500 hrs.	1000 hrs.	1500 hrs.	2000 hrs.	Possible symptom encountered	Remarks
Guide roller ass'y	□	□	□	○	Lateral noises Head occasionally blocked	Abnormal rotation or significant vibration requires replacement.
Sup Guide Shaft	□	□	□	□		Clean tape contact part with the specified cleaning liquid.
Retaining guide	□	□	□	□		
Slant pole or pole base	□	□	□	○□		
Full-erase head	□	□	□	○	Colour and beating	Clean tape contact area with the specified cleaning liquid.
A/C head	□	□	□	○	Small sound or sound distortion	
Upper and lower drum ass'y	□	○□	○□	○□	Poor S/N ratio, no colour Poor flatness of the enve-lope with alignment tape	
Capstan D.D. Motor	□	□	□	○	No tape running, uneven colour	
Pinch roller	□	□	□	○	No tape running, tape slack	Clean rubber and rubber contact area with the specified cleaning liquid.
Reel belt		□		○	No tape running, tape slack, no fast forward/ rewind motion	
Tension band ass'y				○	Screen swaying	
Loading Motor				○	Cassette not loaded or unloaded	
Idler ass'y				○	No tape running, tape slack	
Limiter pulley		□△		○		
Supply/take-up Main brake levers				○	Tape slack	

NOTE: ○:Part replacement. □ : Cleaning △ : apply grease
<Specified> Cleaning liquid Industrial ethyl alcohol

* This mechanism does not need electric adjustment with variable resistor. Check parts. If any deviation is found, clean or replace parts.

REMOVING AND INSTALLING THE CASSETTE HOUSING

• Removal

1. In the cassette removing mode remove the cassette.
2. Unplug the power cord.
3. Remove in the following numerical order.
   a) Remove two screws ①.
   b) Slide and pull up the cassette housing control.

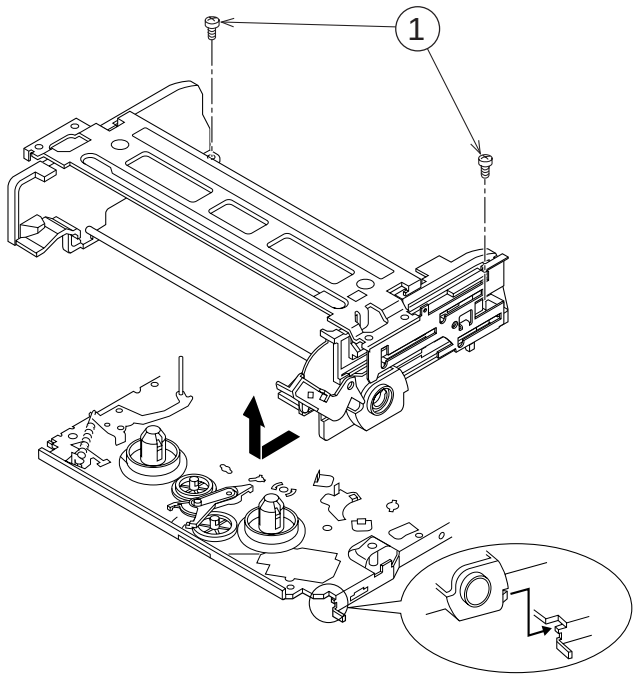

Figure 4-1.

• Reassembly

1. Before installing the cassette housing control, short-circuit TP801 provided at the center (when facing to the main PWB), press the eject button. The casecon drive gear turns and stops when the positioning mark appears. Engage two teeth of casecon drive gear with the three teeth of casecon drive angle gear, and set on the mechanism chassis as shown below.

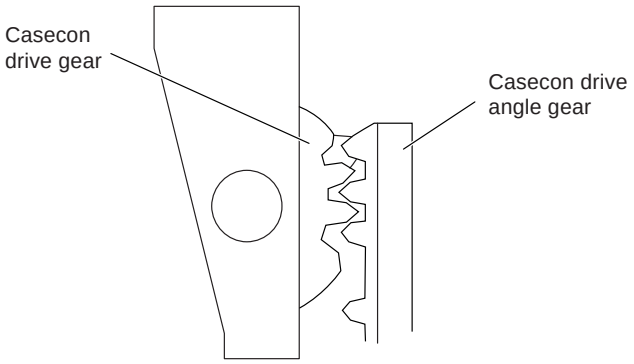

Figure 4-2.

2. Install in the reverse order of removal.

Notes:

1. When fitting the S/E sensor holder to the cassette controller frame L/R, take care.
2. Misengagement of teeth of casecon drive gear and drive angle gear causes malfunction. (The cassette cannot be set, load and ejection are repeated).
3. In the case when you use the magnet screw driver, never approach the magnet driver to the A/C head, FE head, and drum.
4. When installing or removing, take care so that the cassette housing control and tool do not contact the guide pin or drum.
5. After installing the cassette housing control once perform cassette loading operation.

TO RUN A TAPE WITHOUT THE CASSETTE HOUSING CONTROL ASSEMBLY

1. Remove the full-surface panel.
2. Short-circuit TP801.
3. Plug in the power cord.
4. Turn off the power switch.
   (The pole bases move into U.L.position.)
5. Open the lid of a cassette tape by hand.
6. Hold the lid with two pieces of vinyl tape.
7. Set the cassette tape in the mechanism chassis.
8. Stabilize the cassette tape with a weight (500g) to prevent floating.
9. Turn on the power switch.
10. Perform running test.

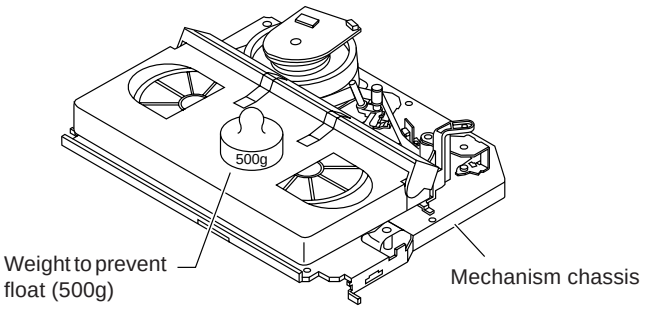

Figure 4-3.

Note:
The weight should not be more than 500g.

To take out the cassette tape.

1. Turn off the power switch.
2. Take out the cassette tape.

REEL DISK REPLACEMENT AND HEIGHT CHECK

- **Removal**

1. Remove the cassette housing control assembly.
2. Pull the tension band out of the tension arm ass'y.
3. Remove the Sup/Tu main brake ass'y.
4. Open the hook at the top of the reel disk, and remove the reel disk.

Note:
Take care so that the tension band ass'y and main brake ass'y (especially soft brake) are not deformed.

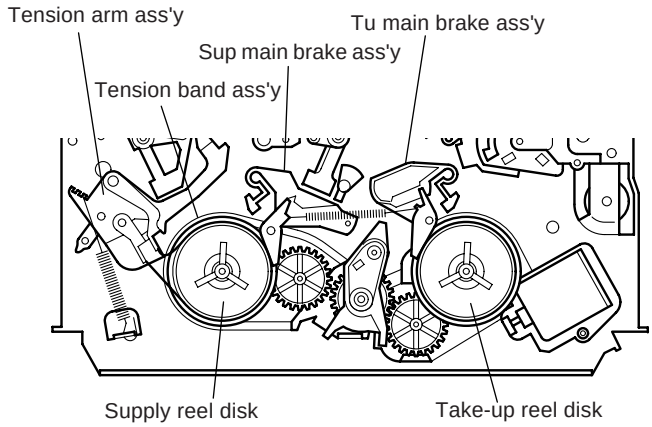

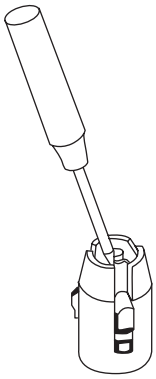

Figure 4-4.

Note:
When the tension band ass'y is pressed in the direction of the arrow for removal, the catch is hard to be deformed.

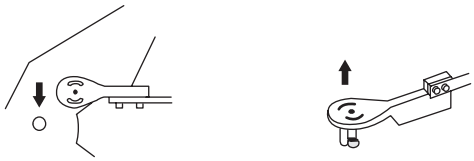

Figure 4-5.

- **Reassembly (Supply reel disk)**

1. Clean the reel disk shaft and apply grease (SC-141) to it.
2. Match the phases of reel disk and reel relay gear, and set the new reel disk.
3. After checking the reel disk height, wind the tension band ass'y around the reel disk, and insert into the hole of tension arm ass'y.
4. Assemble the Sup main brake ass'y.

Notes:

1. When installing the reel disk, take due care so that the tension band ass'y is not deformed and grease does no adhere.
2. Do not damage the Sup main brake ass'y. Be careful so that grease does not adhere to the brake surface.

- **Reassembly (Take-up reel disk)**

1. Clean the reel disk shaft and apply grease (SC-141) to it.
2. Align the phase of the reel disk to that of the reel relay gear and to install a new take-up reel disk onto the shaft.
3. Check the reel disk height and reassemble the take-up main brake ass'y.

Note:

1. Take care so that the Tu main brake ass'y is not damaged. Take care so that grease does not adhere the brake surface.
2. After reassembly, check the video search rewind back tension (see page 18), and check the brake torque (see page 20).

- **Height checking and adjustment**

Note:

1. Set the master plane with due care so that it does not contact the drum.
2. When putting the master plane, shift the reverse guide a little in the loading direction. Care must be taken since excessive shift results in damage.

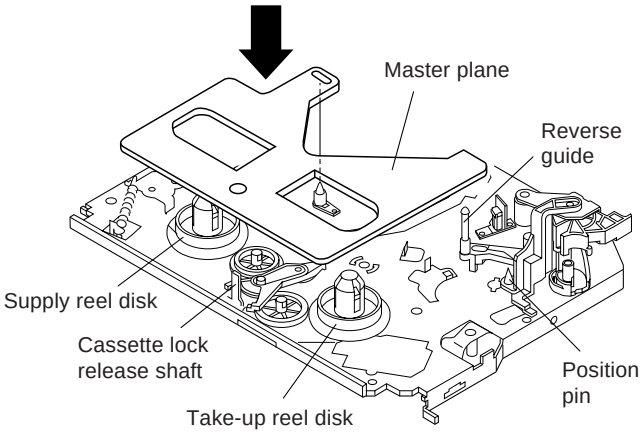

Figure 4-6.

Note:

- Check that the reel disk is lower than part A but higher than part B. If the height is not correct, readjust the reel disk height by changing the poly-slider washer under the reel disk.

Note:
Whenever replacing the reel disk, perform the height checking and adjustment.

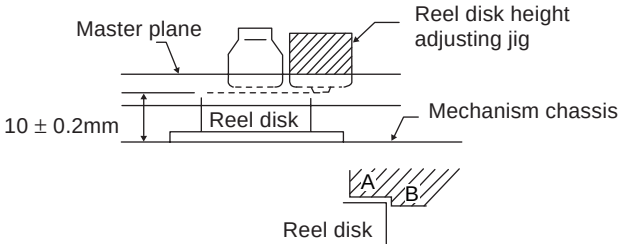

Figure 4-7.

CHECKING AND ADJUSTMENT OF TAKE-UP TORQUE IN FAST FORWARD MODE

- **Remove the cassette housing control assembly.**

- **After short-circuiting TP801 provided at the center (facing to the main PWB), plug in the power cord.**

- **Setting**

1. Set a torque gauge to zero on the scale. Place it on the take-up reel disk.
2. Press the FF button.
3. To calculate the remaining capacity of the play back mode, slowly rotate the supply reel disk, and then shift it into the forward mode.

- **Checking**

1. Turn the torque gauge slowly (one rotation every 2 to 3 seconds) by hand in the CW direction.
2. Make sure that the indication of torque gauge is not less than 30mN·m (306gf·cm).

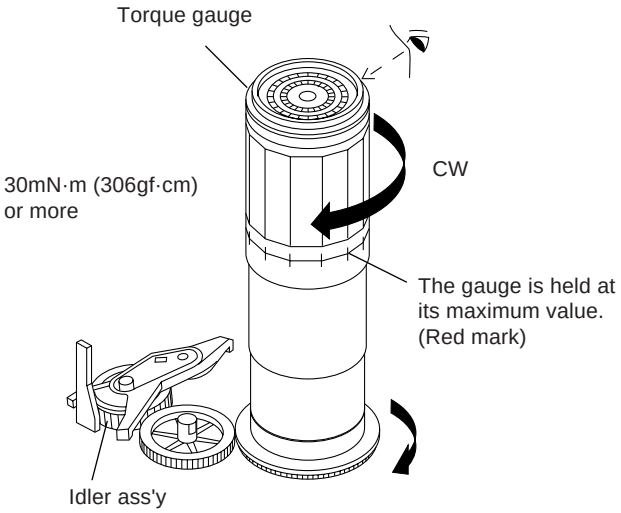

Figure 4-8.

- **Adjustment**

1. If the FF winding-up torque is less than the specified value, clean the capstan D.D. motor pulley, drive belt, and limiter pulley with cleaning liquid, and check again.
2. If the torque is less that the set value, replace the reel belt.

Notes:

1. Hold the torque gauge by hand so that it is not moved.
2. Do not keep the reel disk in lock state. Do not allow long-time measurement.

CHECKING AND ADJUSTMENT OF TAKE-UP TORQUE IN REWIND MODE

- **Remove the cassette housing control assembly.**

- **After short-circuiting TP801 provided at the center (facing to the main PWB), plug in the power cord.**

- **Setting**

1. Set a torque gauge to zero on the scale. Place it on the supply reel disk.
2. Press the rewind button.
3. To calculate the remaining capacity, slowly rotate the take-up reel disk, and then shift it into the rewind mode.

- **Checking**

1. Turn the torque gauge slowly (one rotation every 2 to 3 seconds) by hand in the CCW direction.
2. Make sure that the indication of torque gauge is not less than 30mN·m (306gf·cm).

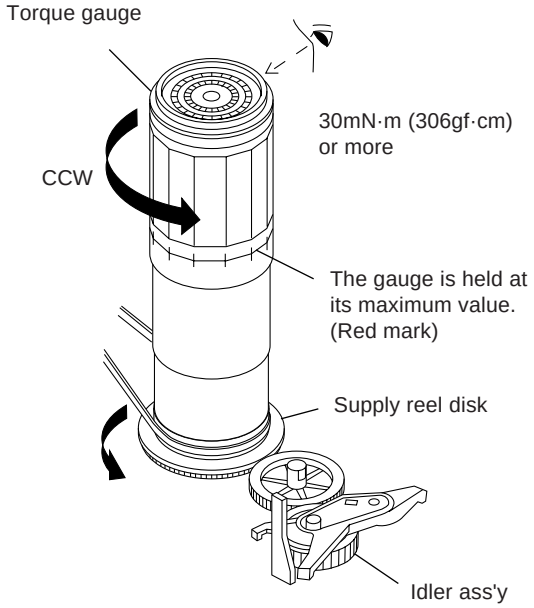

Figure 4-9.

- **Adjustment**

1. If the rewind winding-up torque is less than the specified value, clean the capstan D.D. motor pulley, drive belt, and limiter pulley with cleaning liquid, rewind again, and check the winding-up torque.
2. If the winding-up torque is still out of range, replace the drive belt.

Notes:
1. Hold the torque gauge by hand so that it is not moved.
2. Do not keep the reel disk in lock state. Do not allow long-time measurement.

CHECKING AND ADJUSTMENT OF TAKE-UP TORQUE IN RECORD/PLAYBACK MODE

- **Remove the cassette housing control assembly.**
- **After short-circuiting TP801 provided at the center (facing to the main PWB), plug in the power cord.**
- **Turn off the power switch.**
- **Open the cassette torque meter lid, and fix it with tape.**
- **Load the cassette torque meter into the unit.**
- **Put the weight (500g) on the cassette torque meter.**
- **Turn on the power switch.**
- **Press the picture record button, and set EP picture record mode (x3).**

Set value EP6.9 ± 2.5mN·m (70 ± 25gf·cm)

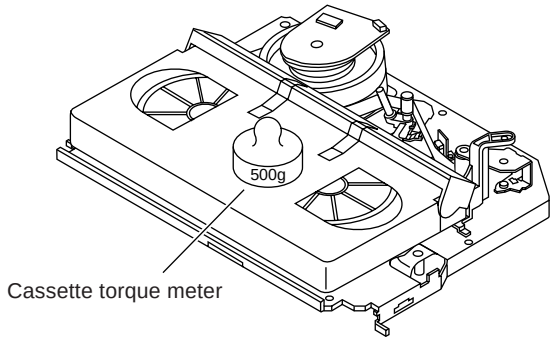

Figure 4-10.

- **Checking**
1. Make sure that value is within the setting 6.9±2.5mN·m (70±25gf·cm).
2. The winding-up torque fluctuates due to variation of rotation torque of limiter pulley ass'y. Read the center value of fluctuation as setting.
3. Set the EP record mode (x3) and make sure that the winding-up torque is within setting.

- **Adjustment**

If the playback winding-up torque is not within the setting, replace the limiter pulley assembly.

Note:

When the torque cassette is set, put a weight (500g) to prevent rise.
When the cassette torque meter is taken out.
Turn off the power switch.

CHECKING AND ADJUSTMENT OF TAKE-UP TORQUE IN VIDEO SEARCH REWIND MODE

- **Remove the cassette housing control assembly.**

- **After short-circuiting TP801 provided at the center (facing to the main PWB), plug in the power cord.**

- **Setting**

  Press the playback button and rewind button to set the video search rewinding mode.

- **Checking**
1. Place the torque gauge on the supply reel disk, and turn it counterclockwise very slowly (one rotation every 1 to 2 seconds) and check that the torque is within the set value 14.0 ± 3.9mN·m. (144 ± 40gf·cm)

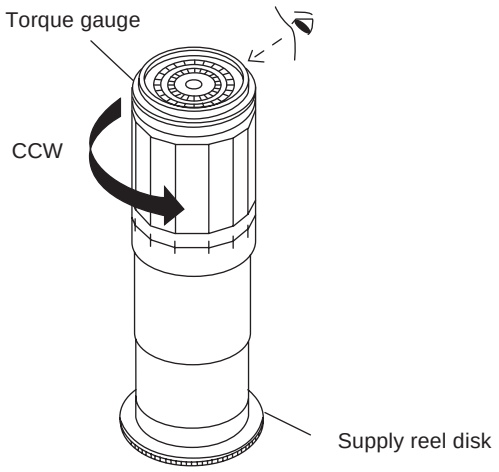

Figure 4-11.

Note:

Surely put the torque gauge on the reel disk to measure. If the torque gauge is raised, accurate measurement is impossible.

- **Adjustment**
1. If the rewinding playback winding-up torque is not within the setting, replace the limiter pulley assembly.

Note:

The winding-up torque fluctuates due to variation of rotation torque of supply reel disk. Read the center value of fluctuation as setting.

CHECKING THE VIDEO SEARCH REWIND BACK TENSION

- **Remove the cassette housing control assembly.**

- **After short-circuiting TP801 provided at the center (facing to the main PWB), plug in the power cord.**

- **Checking**

1. After pressing the play button, press the rewind button, and set the video search rewind mode.
2. Place the torque gauge on the take-up reel disk, and turn it counterclockwise very slowly (one rotation every 2 to 3 seconds) and check that the torque is within the set value 3.4±1.5mN·m (35±15gf·cm).

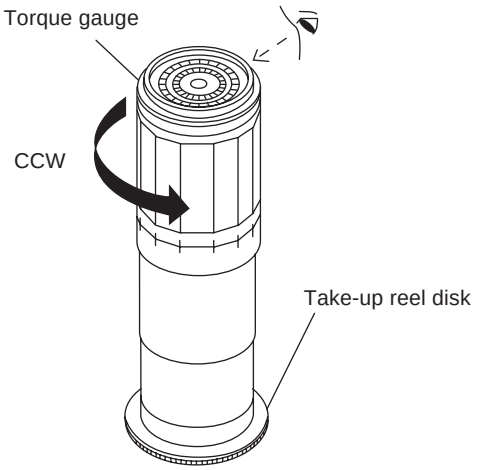

Figure 4-12.

Notes:

Set the torque gauge securely on the take-up reel disk. If it is not secure, the measurement will be incorrect.

CHECKING THE PINCH ROLLER PRESSURE

- **Remove the cassette housing control assembly.**

- **After short-circuiting TP801 provided at the center (facing to the main PWB), plug in the power cord.**

- **Checking**

Press the play button to set the playback mode.

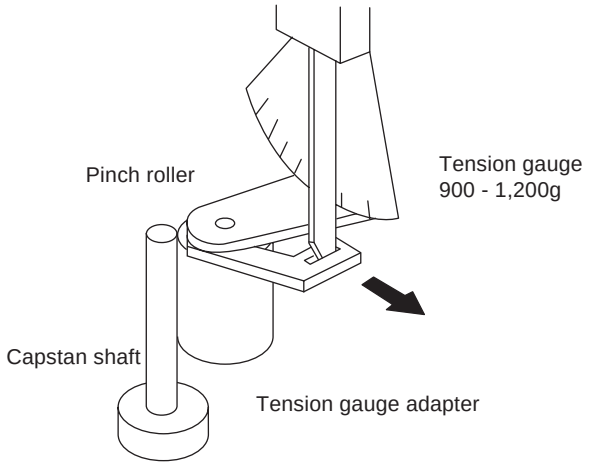

Figure 4-13.

1. Detach the pinch roller from the capstan shaft.
   Do not separate excessively. Or the pinch lever and pinch double action lever may disengage.
2. Engage the tension gauge adapter with the pinch roller shaft, and pull in the arrow direction.
3. Gradually return the pinch roller, and measure the pulling force when the pinch roller contacts the capstan shaft.
4. Make sure that the measured value is within setting 0.9 to 11.8 N (900 to 1,200g).

CHECKING AND ADJUSTMENT OF TENSION POLE POSITION

- **Remove the cassette housing control assembly.**

- **After short-circuiting TP801 provided at the center (facing to the main PWB), plug in the power cord.**

- **Setting**

1. Turn off the power switch.
2. Open the cassette tape (T-120), and fix with tape.
3. Set the cassette tape in loading state.
4. Put the weight (500g) on the cassette tape.
5. Turn on the power switch.
6. Make the adjustment with the beginning of a T-120 tape.

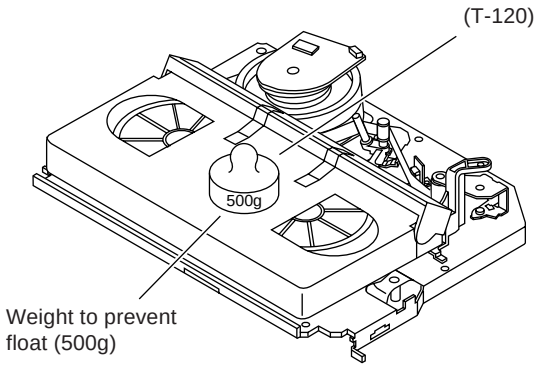

Figure 4-14.

- **Checking**

1. Set a cassette tape, push the REC button to place the unite in the SP record mode. Now check the tension pole position.

2. Visually check to see if the right edge of the tension pole is within the 1.5 ± 0.25 from the right edge of the Sup guide shaft.

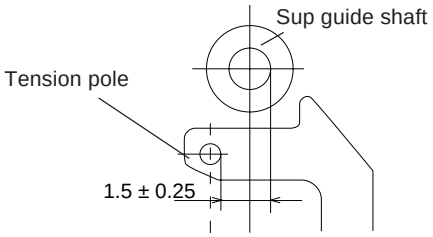

Make the adjustment with the beginning of a T-120 tape.

Figure 4-15.

At left side from the center line

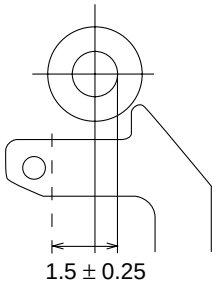

Figure 4-16.

Insert the slotted screwdriver in the tension pole adjuster, and rotate counterclockwise.

At right side from the center line

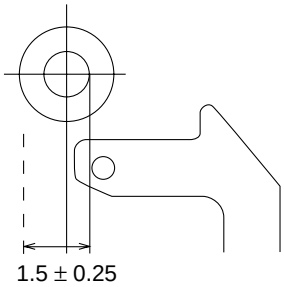

Figure 4-17.

Insert the slotted screwdriver in the tension pole adjuster, and rotate clockwise.

Tension pole adjuster adjusting range

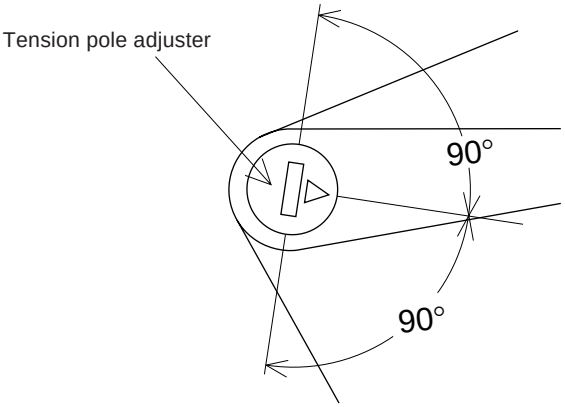

Figure 4-18.

Adjust so that the delta mark of tension pole adjuster is within 90° range (left, right).

CHECKING AND ADJUSTMENT OF RECORD/ PLAYBACK BACK TENSION

- **Remove the cassette housing control assembly.**
- **After short-circuiting TP801 provided at the center (facing to the main PWB), plug in the power cord.**
- **Setting**

1. Turn off the power switch.
2. Open the torque cassette meter and fix with tape.
3. Set the cassette tape in loading state.
4. Put the weight (500g) on the cassette torque meter.
5. Turn on the power switch.

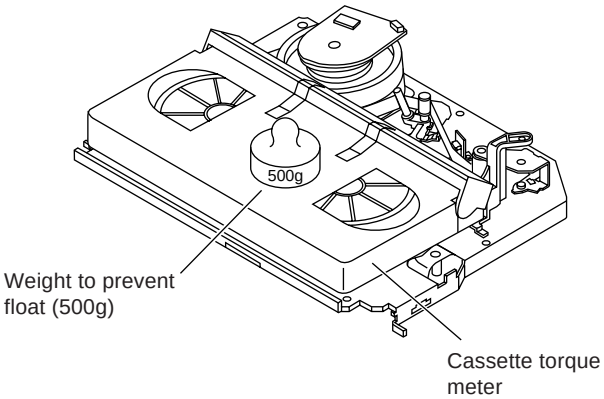

Figure 4-19.

- **Checking**

1. Push the REC button to place the unit in the SP record mode.
2. At this time ascertain that the back tension is within the setting (36.5 to 52g·cm) by seeing the indication of torque cassette meter.

- **Adjustment**

1. If the indication of torque cassette meter is lower than the setting, shift the tension spring engagement to the part A.
2. If the indication of torque cassette meter is higher than the setting, shift the tension spring engagement to the part B.

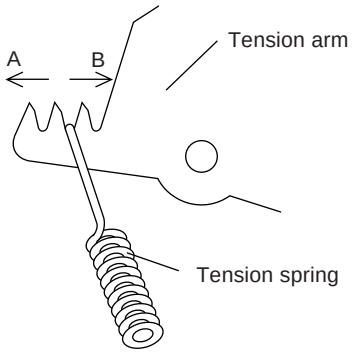

Figure 4-20.

CHECKING THE BRAKE TORQUE

- **Checking the brake torque at the supply side**

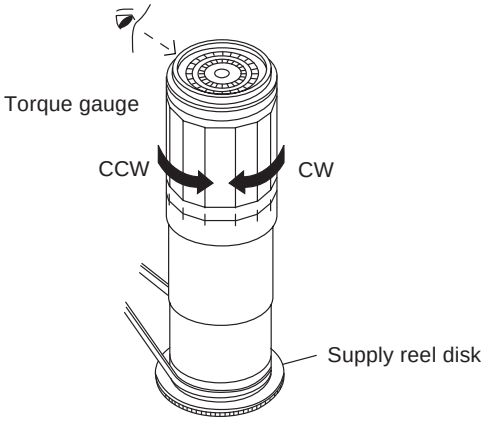

CCW:	3.9~9.8mN·m (40~100gf·cm)
CW:	8.8~23.5mN·m (80~245gf·cm)

Figure 4-21.

- **Remove the cassette housing control assembly.**

- **After short-circuiting TP801 provided at the center (facing to the main PWB), plug in the power cord.**

- **Setting**

1. Set a torque gauge to zero on the scale. Place it on the supply reel disk.
2. Switch from the FF mode to the STOP mode.
3. Disconnect the power cord.

- **Checking**

Turn the torque gauge at a rate of about one turn/2 sec in the CW direction/CCW direction with respect to the supply reel disk so that the reel disk and torque gauge pointer rotate at equal speed, and make sure that the value is within the setting (CW direction: 8.8 to 23.5mN·m (90 to 240gf·cm); CCW direction: 3.9 to 9.8mN·m (40 to 100gf·cm).

- **Checking the brake torque at the take-up side**

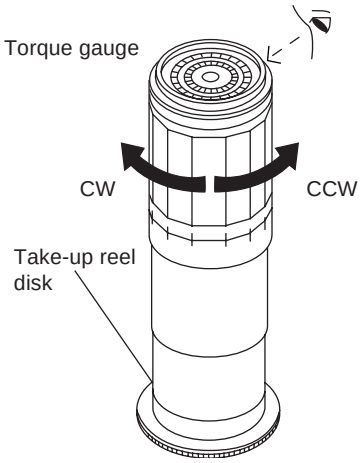

CCW:	8.8~23.5mN·m (80~245gf·cm)
CW:	4.9~11.8mN·m (50~120gf·cm)

Figure 4-22.

- **Remove the cassette housing control assembly.**

- **After short-circuiting TP801 provided at the center (facing to the main PWB), plug in the power cord.**

- **Setting**

1. Switch from the FF mode to the STOP mode.
2. Disconnect the power cord.
3. Set a torque gauge to zero on the scale. Place it on the take-up reel disk.

- **Checking**

1. Turn the torque gauge at a rate of about one turn/2 sec in the CCW direction/CW direction so that the reel disk and torque gauge pointer rotates at equal speed and make sure that the value is within the setting (CCW direction: 8.8 to 23.5mN·m (90 to 240gf·cm), CW direction: 4.9 to 11.8 mN·m (50 to 120gf·cm).

2. Adjustment of the brake torque at the supply side and the take-up side

- Unless the supply side brake torque or take-up side brake torque is within the setting, clean the felt surface of reel disk (supply, take-up) brake lever, check again the brake torque.
- If value cannot be set within the setting yet, replace the main brake ass'y or main brake spring.

REPLACEMENT OF A/C (Audio/Control) HEAD

1. Remove the cassette housing control assembly.
2. In unloading state unplug the power cord.

- **Removal**

1. Remove the screws ①②③, Azimuth screw, Tilt screw.
2. Unsolder the PWB fitted to the A/C head

Notes:

1. When replacing, never touch the head. If you touched, clean with the cleaning liquid.
2. When removing the screw ③, take care so that the spring may spring out.

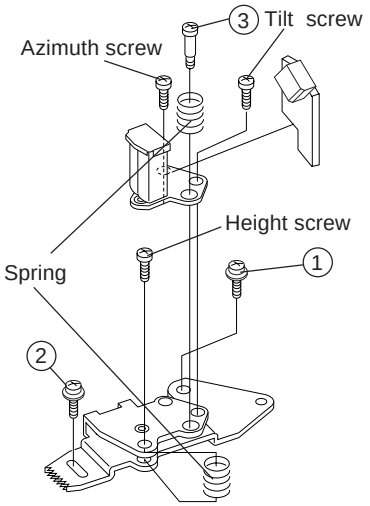

Figure 4-23.

- **Replacement**

1. Solder the removed PWB to the new head assembly.
2. Adjust the height from the A/C head arm (lower surface) to the A/C head plate to 10.8mm with slide calipers. (3 places of azimuth screw section, tilt screw section and A/C head front section) (See the figure below.)

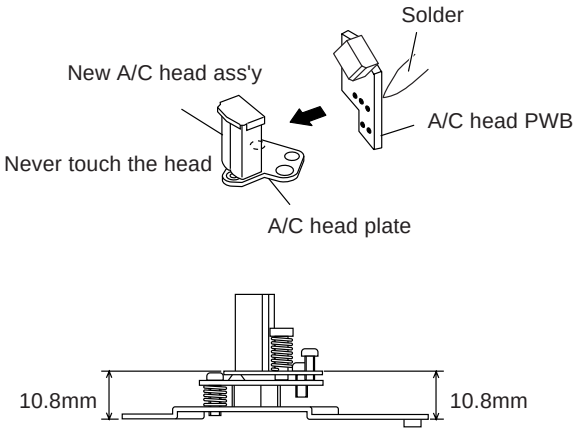

Figure 4-24.

3. Align the left end of gear of A/C head arm with the punched mark of chassis, tentatively tighten the screws ① and ② so as to ensure smooth motion of A/C head arm. Tentative tightening torque must be 0.15 to 0.20 N·m (1.5 to 2.0kgf·cm).

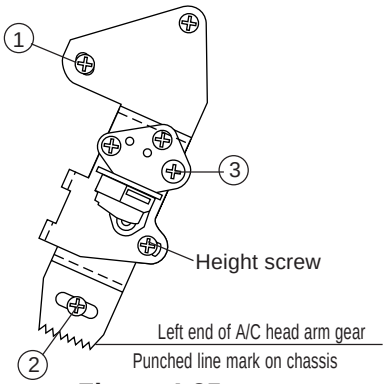

Figure 4-25.

Note:

1. If the screws ① and ② are tighten tentatively too loose, the azimuth and height of A/C head may change when they are finally tightened. Therefore care must be taken.
2. After completion of A/C head be sure to adjust tape running. (Execute the running adjustment by the method described in Page 23, 24.)

A/C HEAD HEIGHT ROUGH ADJUSTMENT

- **Setting**

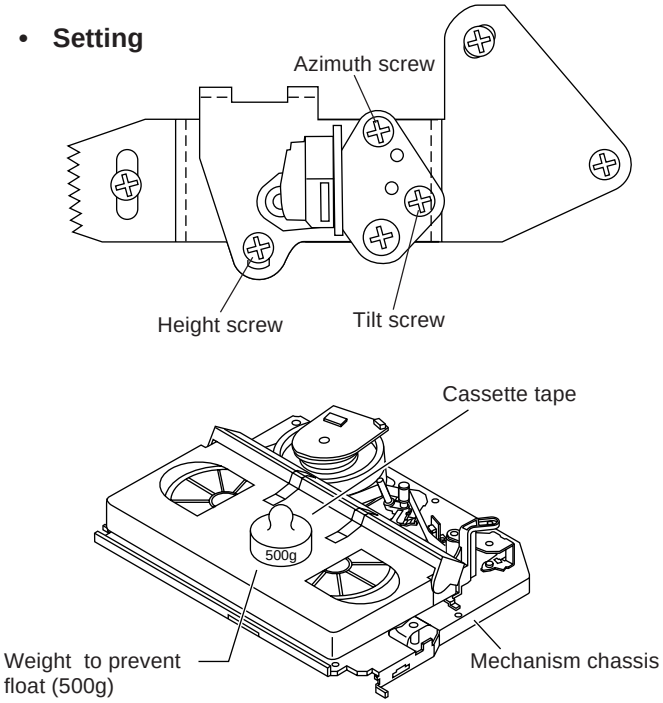

Figure 4-26.

1. Set the cassette tape in the unit.
2. Press the PLAY button to put the unit in the playback mode.
3. Roughly adjust the height of the A/C head by turning the height screw until the tape is in the position shown below.

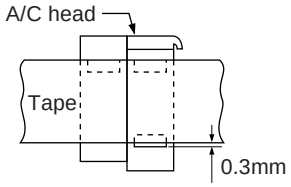

Figure 4-27.

- **Adjustment**

Adjust the height screw visually so that the control head is visible 0.3mm below the bottom of the tape.

HEIGHT ADJUSTMENT OF REVERSE GUIDE

1. Adjust the height from the mechanism chassis to the reverse guide lower flange to 13.38 mm, using the reverse guide height adjustment jig, in tape loading state. (Refer to Figure 4-28 (a) (b).)

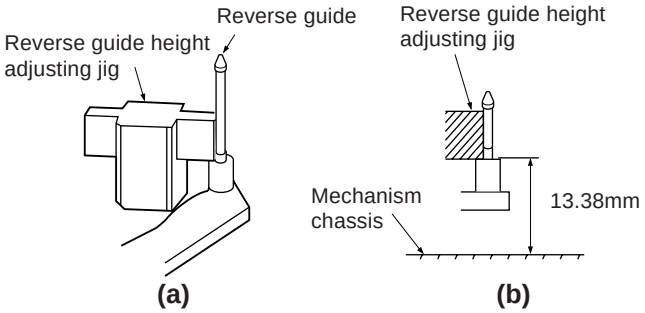

Figure 4-28.

2. Rotate counterclockwise the reverse guide height adjustment nut 1/10 turn. (For height adjustment use the reverse guide height adjustment box driver (JiGDRiVER 11055)).

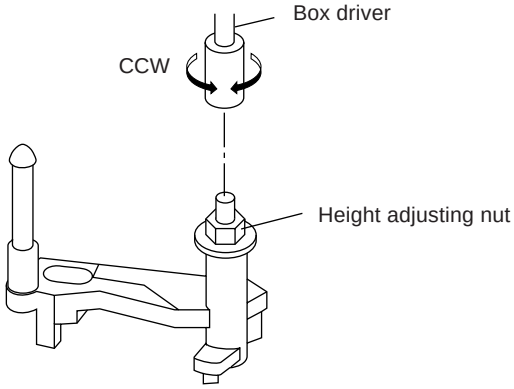

Figure 4-29.

3. Set the tape, and check for tape crease near the reverse guide in the playback mode.
   If crease is found, turn the reverse guide adjustment nut to remove crease. (As for crease check refer to Figure 4-30.)

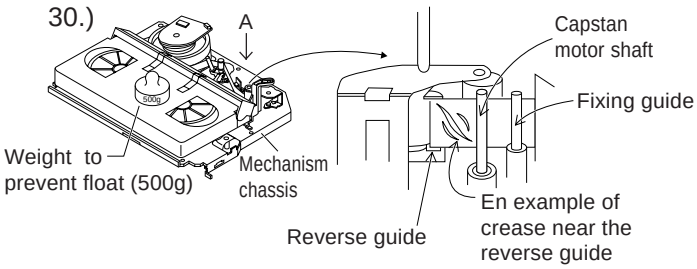

* Check for crease from the A direction.

Figure 4-30.

ADJUSTMENT OF TAPE DRIVE TRAIN

1. Tape run rough adjustment
   ① Remove the cassette housing control assembly.
   ② After shortcircuiting TP801 provided at the center (facing to the main PWB), plug in the power cord.
   ③ Check and adjust the position of the tension pole. (See page 19.)
   ④ Check and adjust the video search rewind back tension. (See page 18.)
   ⑤ Connect the oscilloscope to the test point for PB CHROMA envelope output (TP201). Set the synchronism of the oscilloscope to EXT. The PB CHROMA signal is to be triggered by the head switching pulse (TP202).
   ⑥ Set the alignment tape (VROATSV) to play. (Put a 500g weight on the cassette tape to prevent lift of cassette tape.)

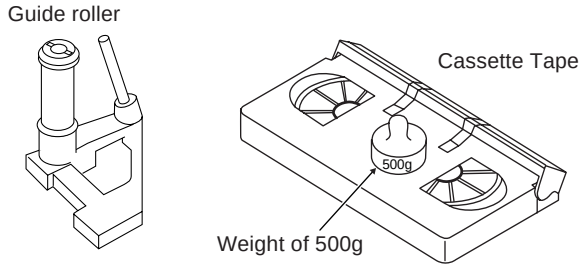

Figure 4-31.

   ⑦ Press the tracking button (+), (–) and change the envelope waveform from max to min and from min to max. At this time make sure that the envelope waveform changes nearly parallel.
   ⑧ Unless the envelope waveform changes nearly parallel, adjust the height of supply side and take-up side guide roller so that the envelope waveform changes nearly parallel. (For envelop adjustment procedure refer to Figure 4-35.)
   ⑨ Turn the tilt screw to remove the tape crease at the fixing guide flange.
   Play back the tape and check for tape crease at the fixing guide flange.
   (1) If there is no tape crease
   Turn the tilt screw clockwise so that tape crease appears once at the flange, and then return the tilt screw so that the crease disappears.
   (2) If there is tape crease
   Turn counterclockwise the tilt screw so that the tape crease disappears.
   (Reference) If the tilt screw is turned clockwise crease appears at the lower flange.

Notes:
1. Previously set the tracking control in the center position, and adjust the envelop waveform to maximum with X value adjustment nut. Thereby the tape run rough adjustment is facilitated.
2. Especially the outlet side envelope waveform must have higher flatness.

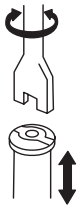

Figure 4-32.

2. Adjustment of A/C head height and azimuth
   ① Perform the initial setting of A/C head position by the method stated in "Page 21 Replacement 3".
   ② Connect the oscilloscope to the audio output terminal.
   ③ Using the alignment tape in which 1 kHz linear audio signal has been recorded, adjust the height screw so as to get max audio output.
   ④ Using the alignment tape in which 7 kHz linear audio signal has been recorded, adjust the azimuth screw so as to get max audio output.

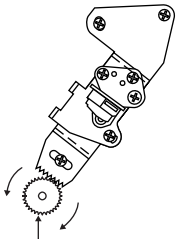

Figure 4-33.

3. Tape run adjustment
   ① Connect the oscilloscope to PB CHROMA envelope output test point, set oscilloscope sync to EXT, trigger-input the PB CHROMA signal (head switching pulse).
   ② Rough adjustment of X value
   Tentatively fix A/C head arm screws ① and ② by the method described in Page 21 "Replacement 3".
   Play back the alignment tape (VROATSV) (VROBBZGS VC-A382U only), and shortcircuit TP802. As a result the auto-tracking is automatically cancelled, so that the X value adjustment mode is set.

Move the A/C head with the X value adjustment gear driver (JiGDRiVER-6) by the method shown in Figure 4-33, and adjust the A/C head so as to get the maximum envelope waveform. (Note: When the A/C head is adjusted, adjust so that the maximum envelop waveform is obtained nearest the position of initial setting made in Page 21.)

③ Next, change the alignment tape to VROEFZCS (VC-A582U/A5833U/H982U/H9833U/H983U) to playback. Press the tracking button (+), (–) and change the envelope waveform from max to min and from min to max. At this time adjust the height of supply and take-up side guide roller with the adjustment driver (JiGDRiVERH-4) so that the envelope waveform changes nearly parallel.

④ If the tape is lifted or sunk from the helical lead surface, the PB CHROMA envelope waveform appears as shown in Figure 4-35.

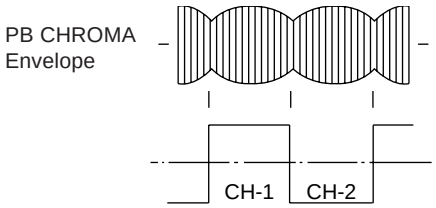

Head switching pulse
Figure 4-34.

⑤ Press the tracking button (+), (–) and make sure that the envelope waveform changes nearly parallel.

⑥ Finally check tape crease near the reverse guide. If tape crease is found, remove it as stated in Page 22 "HEIGHT ADJUSTMENT OF REVERSE GUIDE" item 3.

	When the tape is above the helical lead.		When the tape is below the helicallead.	
	Supply side	Take-up side	Supply side	Take-up side
	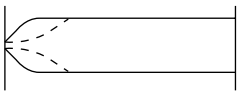	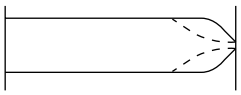	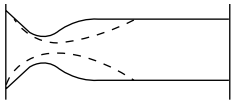	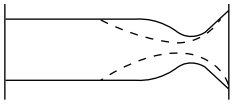
	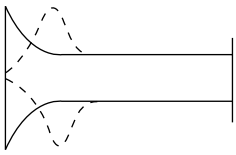	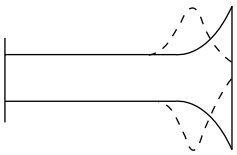	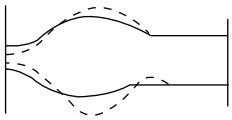	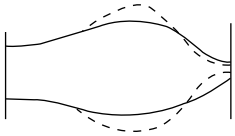
Adjustment	Supply side guide roller rotated in clockwise direction (lowers guide roller) to flatten envelope.	Take-up side guide roller rotated in clockwise direction (lowers guide roller) to flatten envelope.	Supply side guide roller rotated in counterclockwise direction (raises guide roller) to make the tape float above the helical lead. The supply side guide roller is then rotated in the clockwise direction to flatten the envelope.	Take-up side guide roller rotated in counterclockwise direction (raises guide roller) to make the tape float above the helical lead. The take-up side guide roller is then rotated in the clockwise direction to flatten the envelope.

Figure 4-35.

4. A/C head X value adjustment
(① ② ③ VC-A582U/A5833U/H982U/H9833U/H983U only)

① Tentatively fix A/C head arm screws ① and ② by the method described in Page 21 "Replacement 3".

② Playback the alignment tape (VROEFZCS), and shortcircuit TP802. As a result the auto-tracking is automatically cancelled, so that the X value adjustment mode is set.

③ Move the A/C head with the X value adjustment gear driver by the method shown in Figure 4-33, and adjust the A/C head so as to get the maximum envelope waveform. (Note: At this time adjust so as to get the maximum envelope waveform nearest the A/C head position which has been set in case of X value rough adjustment as stated in Page 24, 3- ②.)

④ Tighten finally the screws ① and ②. Be sure to tighten at first the screw ① and then the screw ②. Final tightening torque is 0.6N·m (If the screw ② is tightened first, the X value may deviate.)

⑤ Adjust the playback switching point (Refer to the electric adjustment method.)

⑥ Playback the self-picture-recorded tape, and check the flatness of envelope waveform and sound.

Note:

1. When the A/C head X value adjustment is performed, be sure to perform at first X value rough adjustment (refer to Page 24, 3-②).
2. Foloow ①,② and ③ only VC-A582U/A5833U/H982U H983U/H9833U.

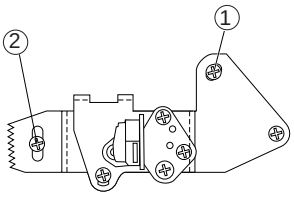

Figure 4-36.

REPLACEMENT OF THE CAPSTAN D.D. (DIRECT DRIVE) MOTOR

- Remove the mechanism from the main PWB (refer to Page 8 "1. When removing the mechanism from the main PWB").

- **Removal (Follow the order of indicated numbers.)**

1. Remove the reel belt ①.

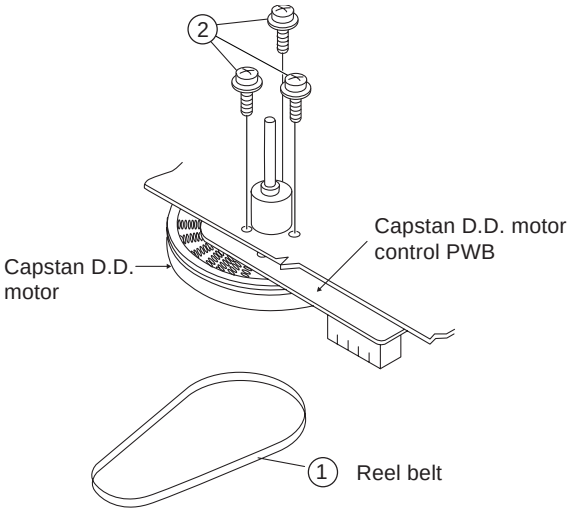

Figure 4-37.

2. Remove the three screws ②.

- **Reassembly**

1. Taking care so that the capstan shaft does not contact the mechanism chassis, set its position on the mechanism chassis, and then install with the three screws.
2. Install the reel belt.

Notes:

1. After installing the capstan D.D. motor, be sure to rotate the capstan D.D. motor and check the movement.
2. Set the tape, and check for the tape crease near the reverse guide in the playback mode. Adjust the A/C head and azimuth as stated in Page 23 item 2. If crease is found, adjust as stated in Page 22 "HEIGHT ADJUSTMENT OF REVERSE GUIDE".

REPLACEMENT OF DRUM D.D. MOTOR

1. Set the ejection mode.
2. Withdraw the main power plug from the socket.

- **Removal (Perform in numerical order.)**

1. Disconnect the FFC cable ①.
2. Unscrew the D.D. stator assembly fixing screws ②.
3. Take out the D.D. stator assembly ③.
4. Unscrew the D.D. rotor assembly fixing screws ④.
5. Take out the D.D. rotor assembly ⑤.

Notes:

1. In removing the D.D. stator assembly, part of the drum earth spring pops out of the pre-load collar.
   Be careful not to lose it.
2. Install, so that the D.D. rotor ass'y and upper drum ass'y mounting direction check holes align.
   (Align the upper drum dent with the rotor hole.)
3. Be careful not to damage the upper drum or the video head.
4. Protect the hole elements from shock due to contact with D.D. stator or D.D. rotor ass'y.
5. After installation adjust the playback switching point for adjustment of servo circuit.

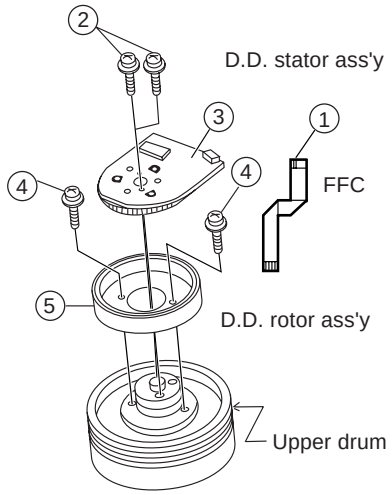

Figure 4-38.

REPLACING THE UPPER AND LOWER DRUM ASSEMBLY

• Replacement (Perform in the numerical order)
① Remove the motor as stated in Page 25 D.D. motor replacement.
② Remove the drum earth brush ②.
③ Remove the drum base ③ from the upper and lower drum assembly ①.

[Cares when replacing the drum]
1. Be careful so that the drum earth brush is not lost.
2. Do not touch directly the drum surface.
3. Fit gently the screwdriver to the screws.
4. Since the drum assembly is an extremely precise assembly, it must be handled with utmost care.
5. Make sure that the drum surface is free from dust, dirt and foreign substances.
6. After replacing the drum be sure to perform the tape running adjustment.
   After that, perform also the electrical adjustment.
   • Playback switching point adjustment
   • X-position adjustment and check
   • Standard and x-3 slow tracking adjustment
7. After replacing the drum clean the drum.

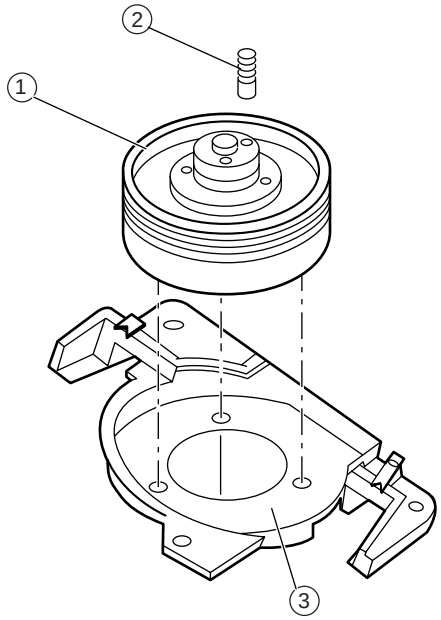

Figure 4-39.

ASSEMBLING OF PHASE MATCHING MECHANISM COMPONENTS

- **Assemble the phase matching mechanism components in the following order.**

1. Assemble the pinch roller assembly and pinch drive cam.
2. Mounting the shifter (on the back of the mechanism chassis).
3. Mounting the master cam (on the back of the mechanism chassis).
4. Assemble the connection gear, slow brake and loading motor parts.

• Pinch drive cam and pinch roller assembling method.

(Place the following parts in position in numerical order.)
(1) Reverse drive lever ①
(2) Reverse guide spring ②
(3) Reverse guide lever ass'y ③
(4) Reverse guide height adjusting nut ④
(5) Pinch drive cam ⑤
(6) Pinch roller ass'y ⑥
(7) Open lever ⑦

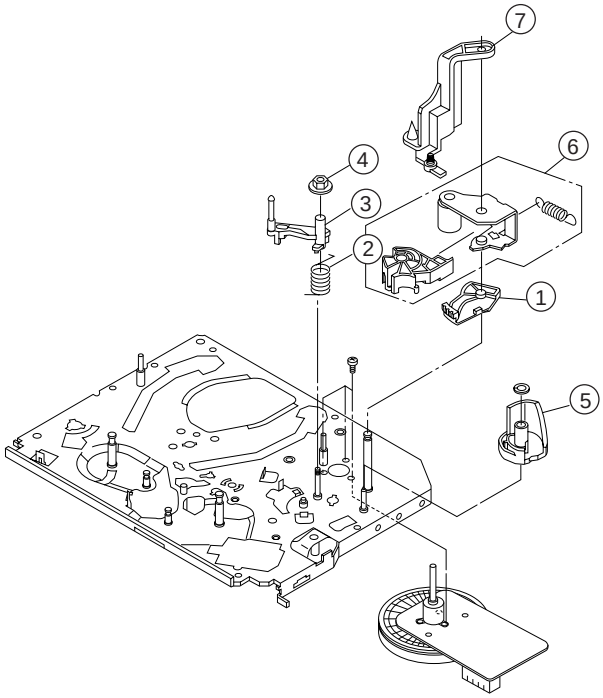

Figure 4-40.

①Insert Reverse Guide Lever Ass'y

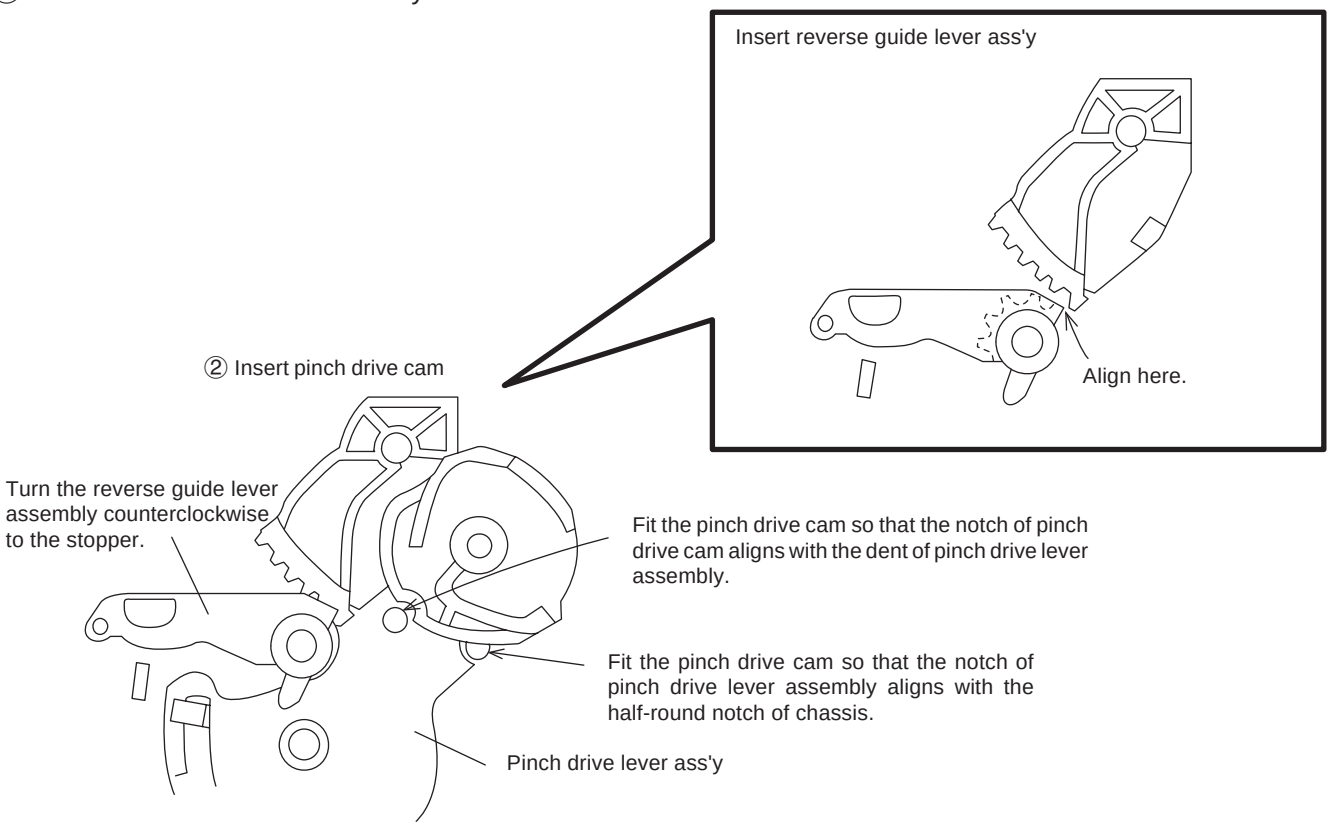

Figure 4-41-1.

②Insert Pinch Roller/Pinch Double Action Lever Ass'y.

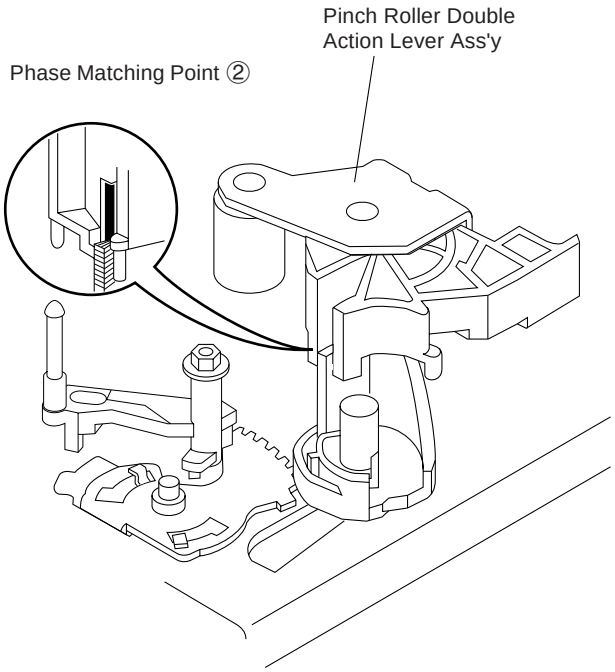

Figure 4-41-2.

③Insert Open Lever.

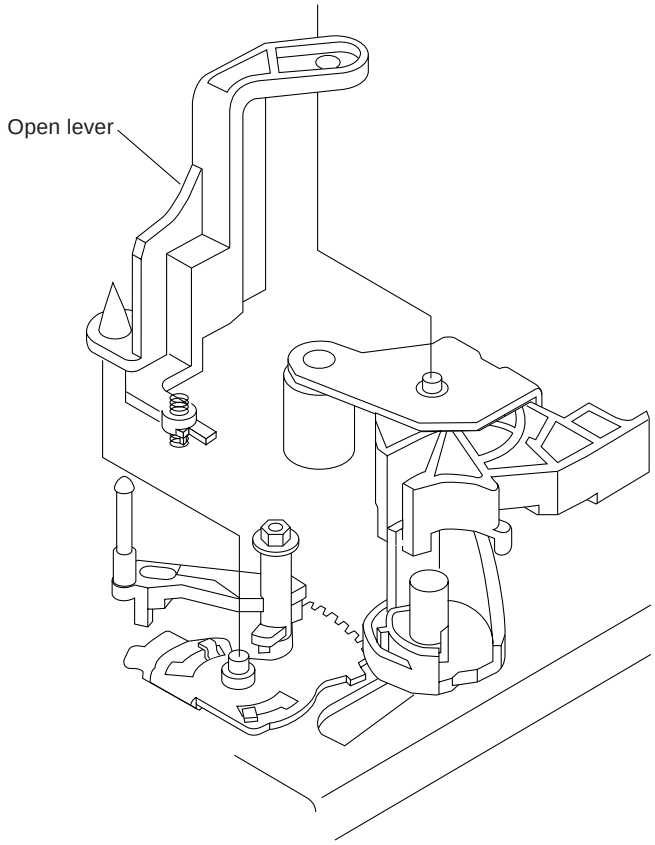

Figure 4-41-3.

INSTALLING THE SHIFTER

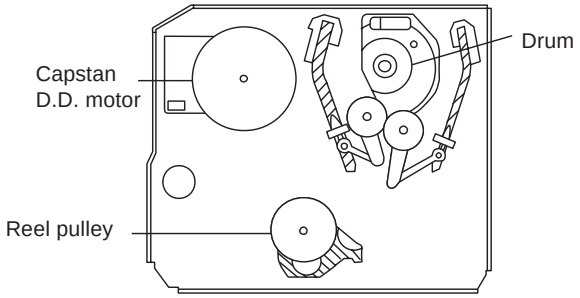

(Bottom side of mechanism chassis)

Figure 4-42.

1. Make sure that the loading gear is at the point ① as shown below.
2. Install, paying attention to ⑥ insertion points and ③ release points.
3. For the phase matching at the insertion point ①, see the point ② as shown below.
4. Finally fix the inserts ① and ④.

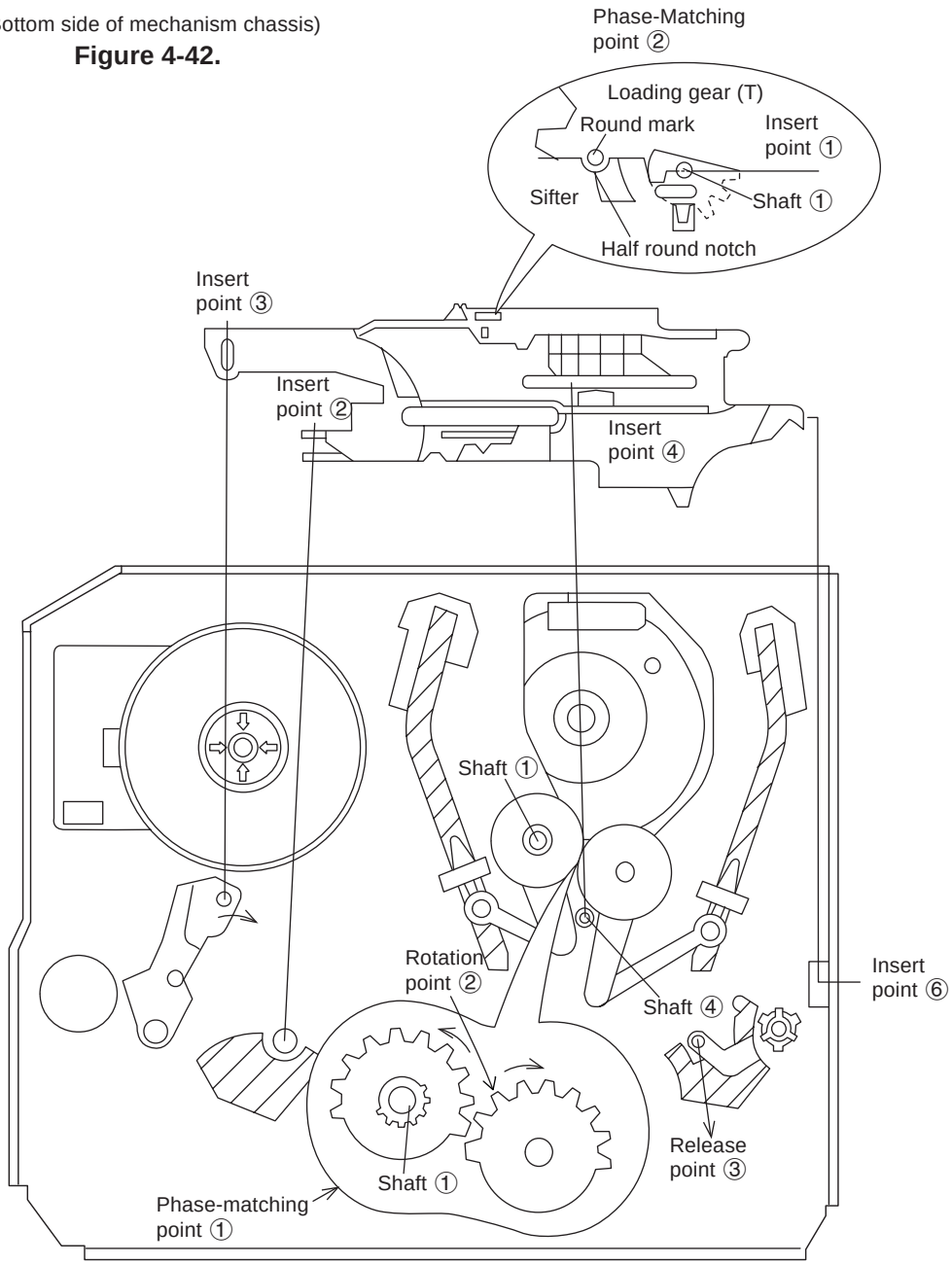

Figure 4-43.

INSTALLING THE MASTER CAM (AT REAR SIDE OF MECHANISM CHASSIS)

1. Make sure beforehand that the shifter is at the point as shown below.
2. Place the master cam in the position as shown below.

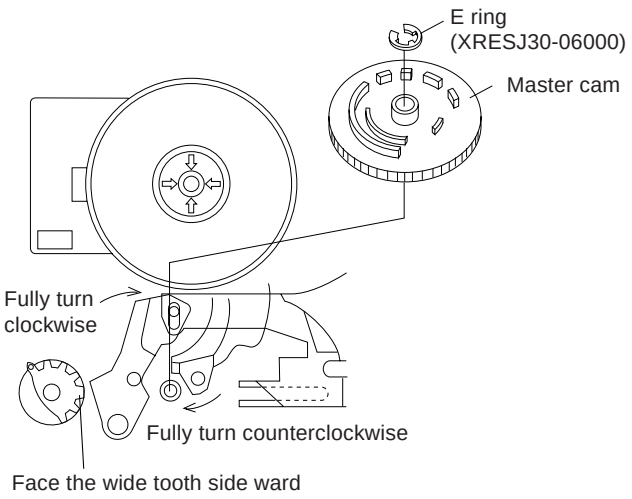

Figure 4-44-1.

Note:
See the figure below for the phase matching between the master cam and the casecon drive gear.

3. Finally fix with the E ring.

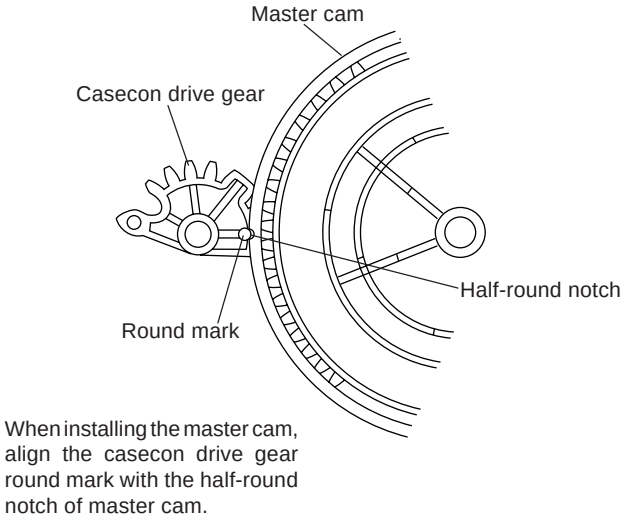

Figure 4-44-2.

REPLACEMENT OF LOADING MOTOR

- **Removal**

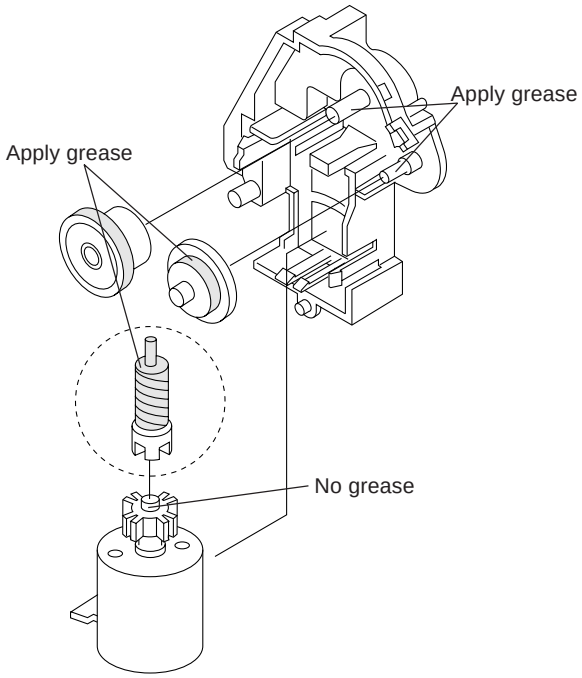

Figure 4-45.

- **Replacement**

1. Remove the loading motor, and install the replacement loading motor as shown below.

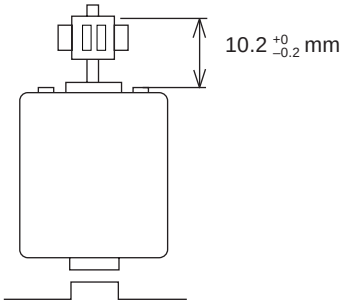

Figure 4-46.

The loading motor pressing-in must be less than 14.7 N (15 gf).
Adjust the distance between motor and pulley to 10.2 $^{+0}_{-0.2}$ mm).

ASSEMBLY OF CASSETTE HOUSING

1. Drive Gear and R Drive angle ass'y

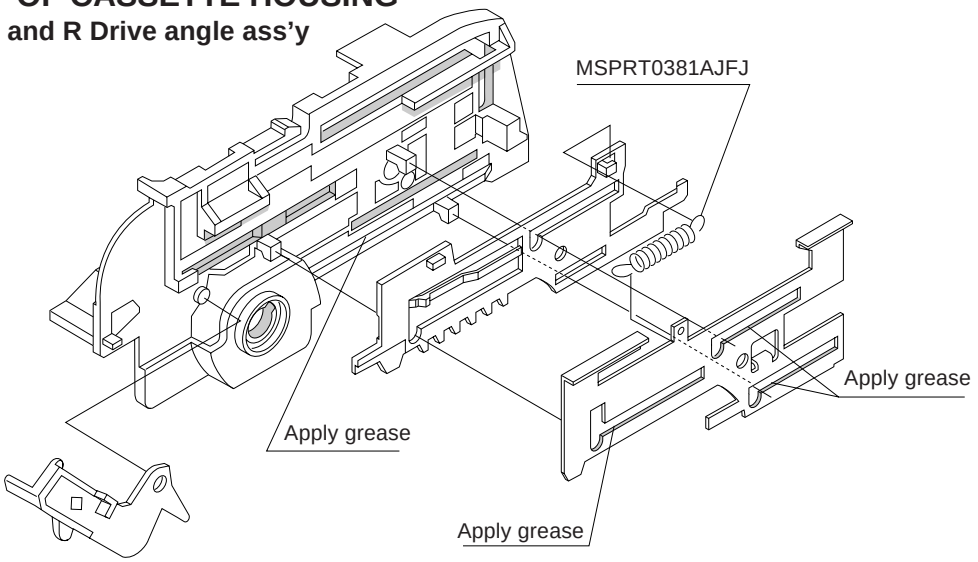

Figure 4-47.

2. Synchro Gear, Drive Gear L and Drive Gear R

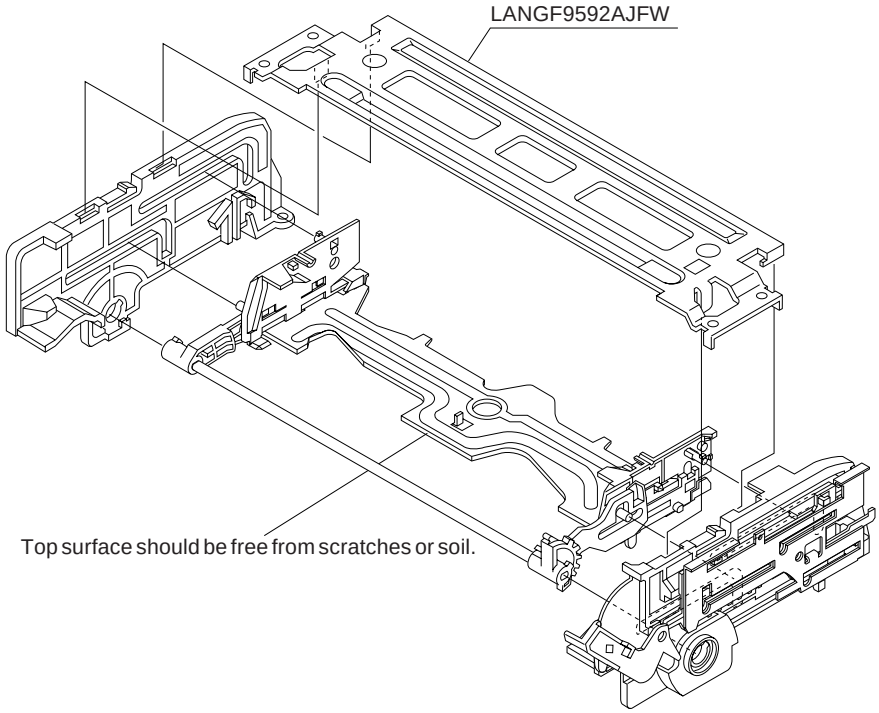

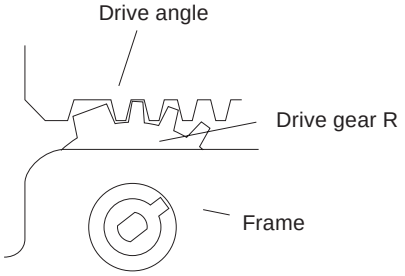

Figure 4-48.

5. ELECTRICAL ADJUSTMENT

Notes:

- **Before the adjustment:**
  Electrical adjustments discussed here are often required after replacement of electronic components and mechanical parts such as video heads.
  Check that the mechanism and all electric components are in good working condition prior to the adjustments,otherwise adjustments can not be completed.

- **Instruments required:**
  - Color TV monitor
  - Audio signal generator
  - Blank video cassette tape
  - Screwdriver for adjustment
  - RF signal generator
  - Dual-trace oscilloscope
  - AC milli-voltmeter
  - Alignment tape (VROATSV)
  - Color bar generator

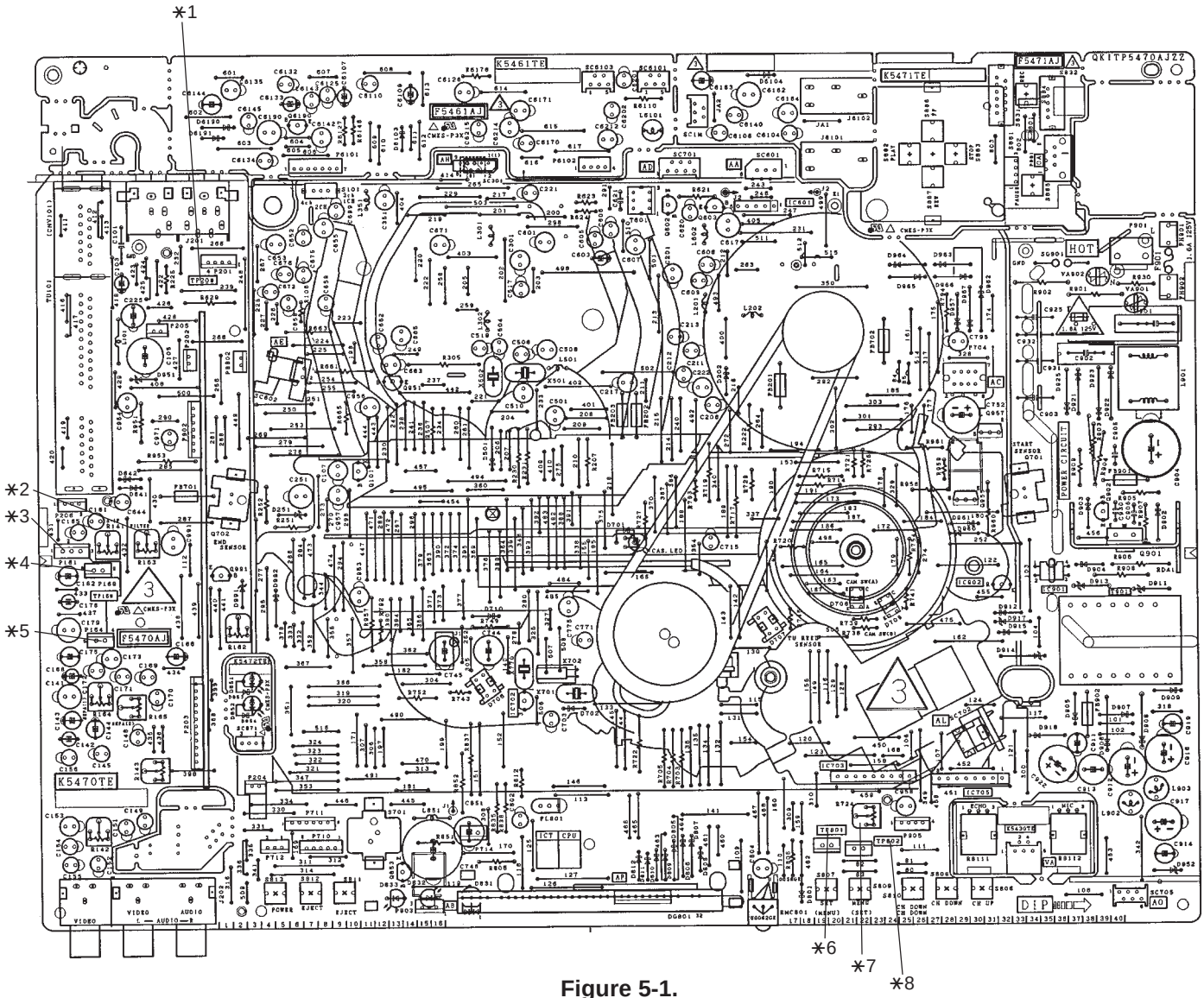

Figure 5-1.

∗1 ... TP201-204
∗2 ... R163
∗3 ... TP161-163
∗4 ... TP168-169
∗5 ... TP164-165
∗6 ... TP801
∗7 ... R724
∗8 ... TP802

SERVO CIRCUIT ADJUSTMENT

5-1 ADJUSTMENT OF HEAD SWITCHING POINT

Measuring instrument	Dual-trace oscilloscope
Mode	Playback
Cassette	Alignment tape (VROABZGS)
Test point	VIDEO OUT jack to CH2 TP202 (Sig.)~TP203 (GND) to CH1
Control	R724 Head switching point adjustment control
Specification	5.5± 0.5H (lines)

1. Remove the front panel and play the alignment tape.
2. Connect a dual-trace oscilloscope to the VIDEO OUT jack and TP202 (Sig.) and TP203 (GND).
   (Trigger the oscilloscope with the head switching pulse on TP202.)
3. Playback the alignment tape, and then short circuit between TP802 on the main PWB, and press both CH button (+) and CH button (–) at same time.
4. Adjust R724 so that the leading edge of the head switching pulse is 5.5H (lines) ahead of the vertical sync as shown in Figure 5-2.
5. Cancel the short circuited.

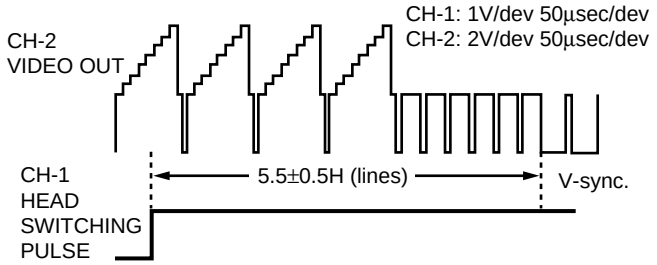

Figure 5-2.

5-2 ADJUSTMENT OF FV (False Vertical Sync) OF STILL PICTURE

Measuring instrument	Color TV monitor
Mode	Playback still
Cassette	Self-recorded tape (SP mode) (See Note below 2)
Control	Tracking control buttons(+) or (–)
Specification	No vertical jitter of picture

1. Play a cassette which was recorded by the unit in SP mode.
2. Press the PAUSE/STILL button to freeze the picture.
3. Look at the monitor screen and adjust (+) or (–) TRACKING buttons so that the vertical jitter of the picture is minimized.
4. Play and freeze the self-recorded tape in EP mode and make sure vertical jitter of the picture is not noticeable.

Note:

1 The FV goes back to the it's initial state when the unit is put into the system controller reset mode due to power failure, etc.
In this case, preset the FV once again.

2 Self-recorded tape is a cassette whose program was recorded by the unit being adjusted.

5-3 CHECKING OF OFF TRACK

Measuring instrument	Color TV monitor
Mode	Playback
Cassette	Self-recorded tape (EP mode) (See Note below)
Control	Tracking control buttons(+) or (–)
Specification	No Poor picture and Hi-Fi sound

1. Play a cassette which was recorded by the unit in EP mode.
2. Short circuit between TP802 on the main PWB, and press both CH button (+) and CH button (–) at same time.
3. Press the tracking buttons (+) and (–) 20 times each to bring the tracking off center. Make sure that:
   1) There is nothing unusual on the playback screen.
   2) There is nothing unusual in the Hi-Fi sound (for the Hi-Fi models only).
5. Cancel the short circuit.

Note:

Self-recorded tape is a cassette whose program was recorded by the unit being adjusted.

MTS CIRCUIT ADJUSTMENT. (HI-FI MODELS ONLY)

5-4 ADJUSTMENT OF SIF-INPUT LEVEL

Measuring instrument	AC milli-voltmeter and RF signal generator.
Mode	E-E
Input signal	RF CH-10 (at 1kHz 100%MOD.)
Test point	AUDIO OUT jack
Control	R141(S-IF ADJ.)
Specification	–3 ± 2dBs (1.2~2.0Vp-p)

1. Feed the RF signal CH-10 (at 1kHz 100%MOD.) to antenna terminal.
2. Connect the AC milli-voltmeter to AUDIO OUT jack.
3. Adjust R141(S-IF ADJ.) so that the AC milli-voltmeter reads –3 ± 2dBs.

5-5 ADJUSTMENT OF FILTER

Measuring instrument	AC milli-voltmeter
Mode	E-E
Input signal	22.9kHz at 245mVrms
Test point	TP164 (Sig.),TP165 (GND)
Control	R163 (FILTER ADJ.)
Specification	Minimized

1. Make the short circuited to TP162 (Sig.)~TP163 (GND).
2. Connect the AC milli-voltmeter to TP164 (Sig.)~TP165 (GND).
3. Feed the 22.9kHz at 245mVrms signal to the TP161(Sig.)~TP163 (GND).
4. Adjust R163 (FILTER ADJ.) so that the AC milli-voltmeter reads minimized.

5-6 ADJUSTMENT OF STEREO VCO

Measuring instrument	AC milli-voltmeter
Mode	E-E
Input signal	15.734kHz at 50mVrms
Test point	TP168 (Sig.),TP169 (GND)
Control	R163 (STEREO VCO ADJ.)
Specification	————————

1. Make the short circuited to TP162 (Sig.)~TP163 (GND).
2. Connect the AC milli-voltmeter to TP168(Sig.)~TP169 (GND).
3. Make a note of the level of TP168 (Sig.)~TP169 (GND).
4. Feed the 15.734kHz at 50mVrms signal to the TP161(Sig.)~TP163 (GND).
5. Adjust R163 (STEREO VCO ADJ.) so that the levels for non signal inputed STEP 3. and inputed be just the same.
6. When the 15.734kHz at 50mVrms signal is fed confirm the display "STEREO" is indicated on OSD.

5-7 ADJUSTMENT OF STEREO SEPARATION

Measuring instrument	Dual AC milli-voltmeter and RF signal generator.
Mode	E-E
Input signal	RF CH-10 (300Hz and 3kHz 30% modulation)
Test point	AUDIO OUT jack
Control	R164 (SEPARATION-1 ADJ.) R165 (SEPARATION-2 ADJ.)
Specification	maximized

1. Feed the RF signal CH-10 (300Hz and 3kHz 30% modulation) to antenna terminal.
2. Connect an Dual AC milli-voltmeter to left channel and right channel output terminales.
3. Set the audio signal to 300Hz and the modulation factor to 30% (Left channel only) and adjust R164 (SEPARATION-1 ADJ.) so that the difference between left channel and right channel outputs becomes maximized.
4. Set the audio signal to 3kHz and the modulation factor to 30% (right channel only) and adjust R165 (SEPARATION-2 ADJ.) so that the difference between left channel and right channel outputs becomes maximized.
5. Repeat STEP 3. until obtain a specification.

6. MECHANISM OPERATION FLOWCHART AND TROUBLESHOOTING GUIDE

MECHANISM OPERATION FLOWCHART

* This flowchart describes the outline of the mechanism's operation, but does not give its details.

F mechanical timing

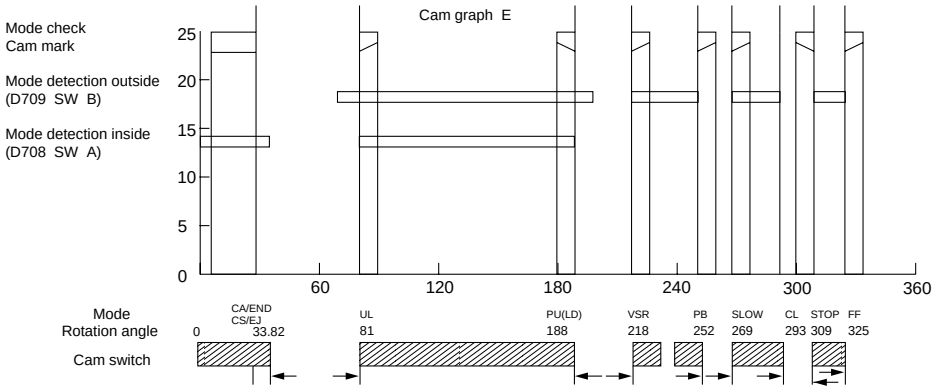

	EJ		UL	PU	VSR	PB	SLW	CL	STP	FF
Mode detection outside	0	0	0 1	1 1 0	1 0	0	1	0	1	0
Mode detection inside	1	0	1 1	1 0						
S sensor	1	1 0	1 1 or 0							

S sensor open 0
close 1

	Mode detection inside Sensor A	Mode detection outside Sensor B
CS/EJ	1	0
ULD	1	1
PU LD	1	1
VSR	0	1
PB	0	0
STILL	0	1
CL	0	0
STOP	0	0
FF	0	0

CASSETTE INSERTION → STOP

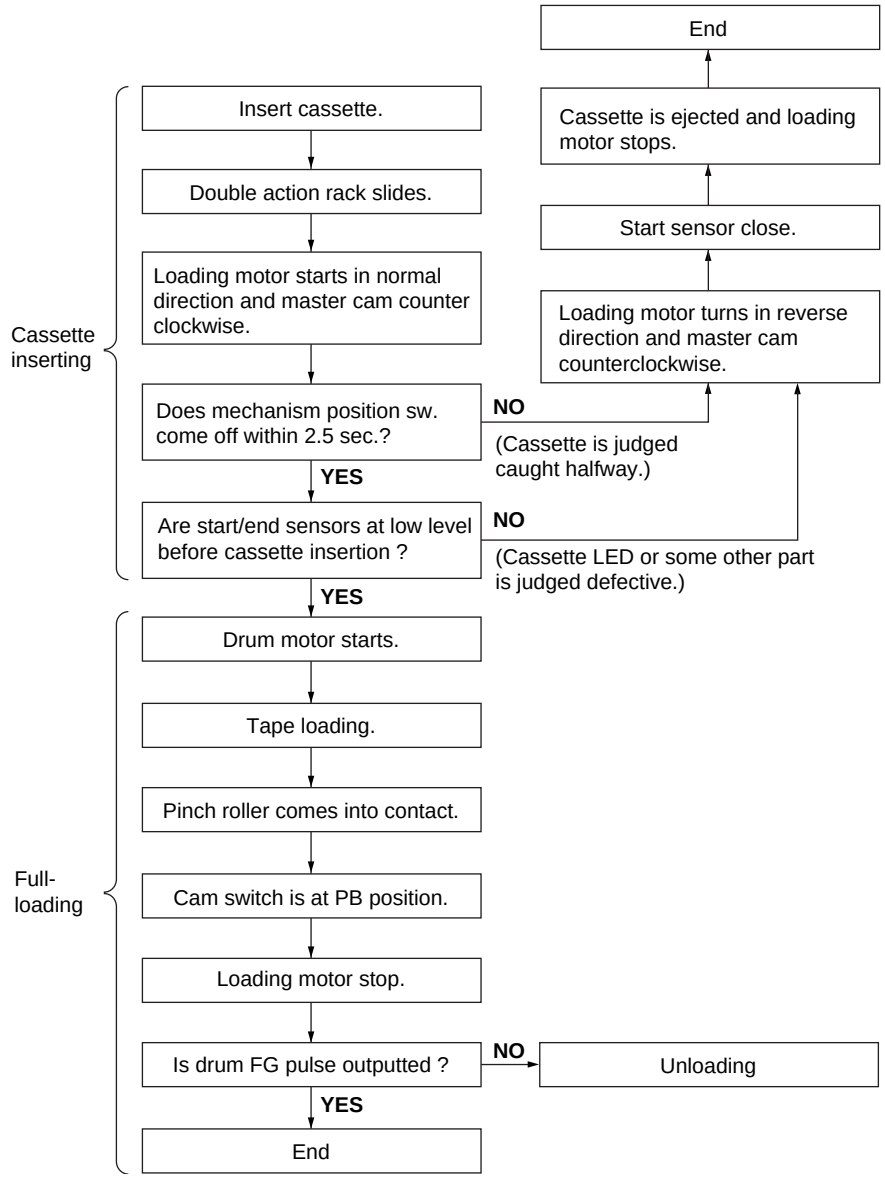

STOP → REC/PLAY

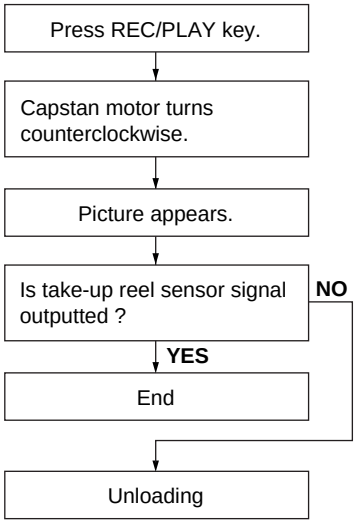

PLAY → STILL

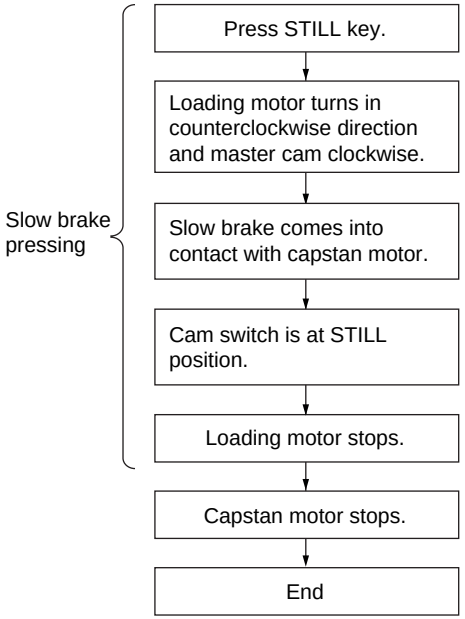

PLAY → VSR

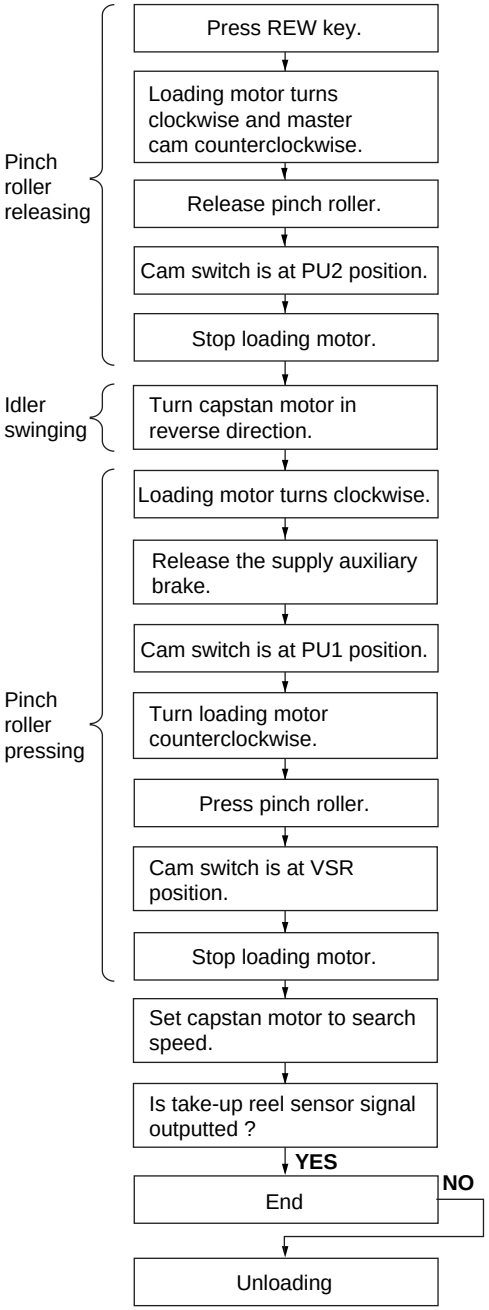

VSR → PLAY

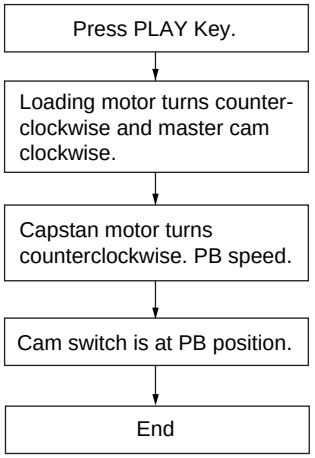

PLAY → VSF

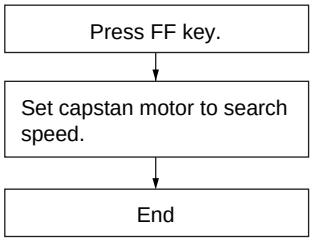

REC/PLAY → STOP

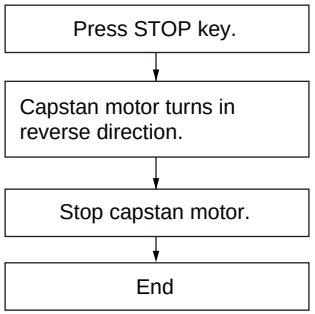

STOP → FF/REW

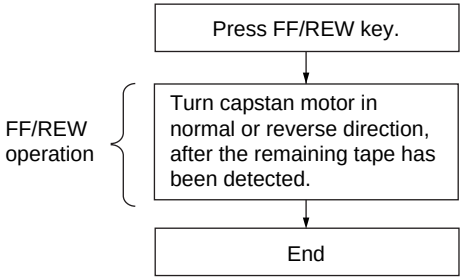

FF/REW → STOP

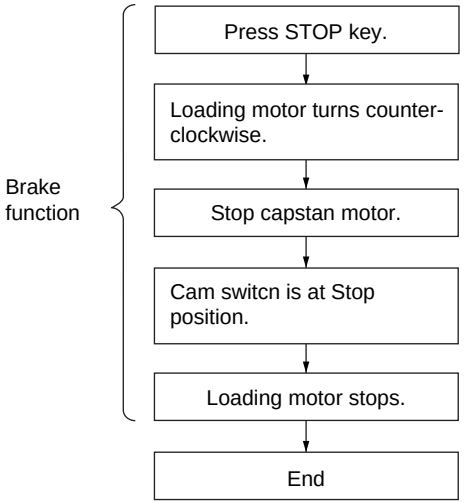

STOP → CASSETTE EJECT

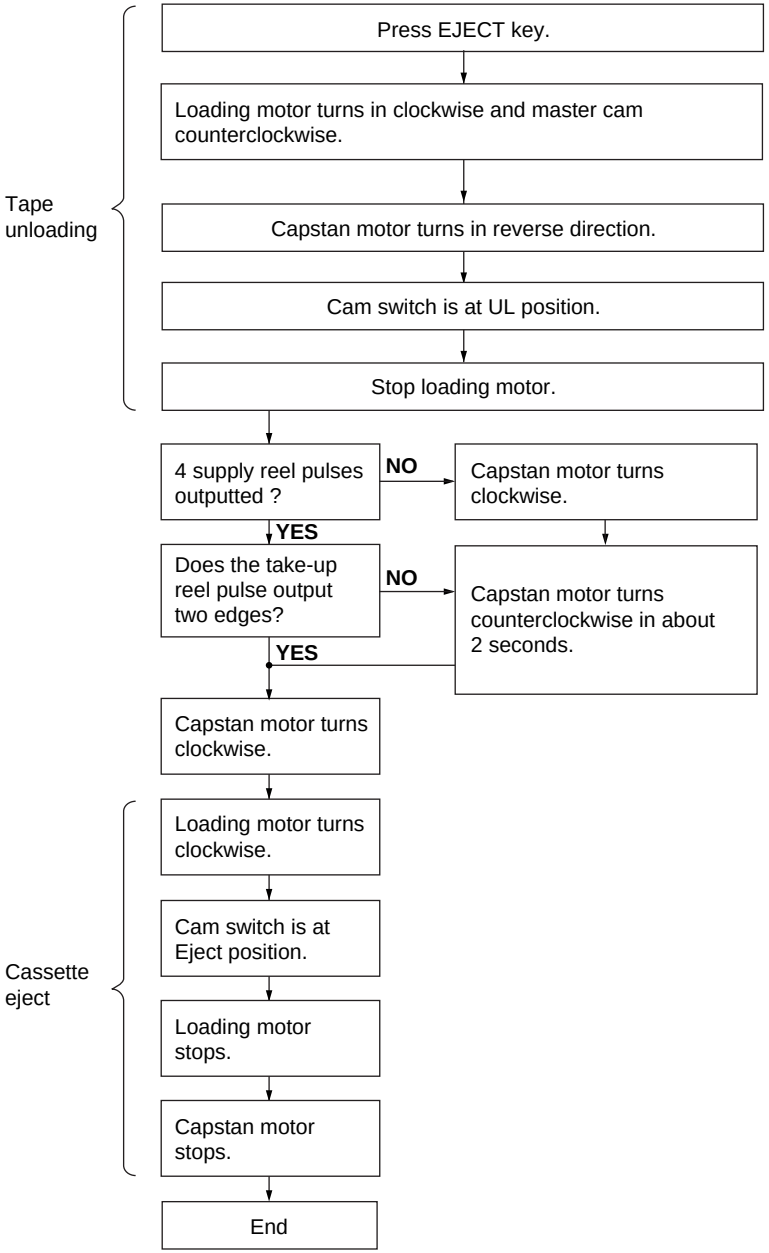

MECHANISM TROUBLESHOOTING

1. FF/REW FAILURE (NO TAPE WINDING)

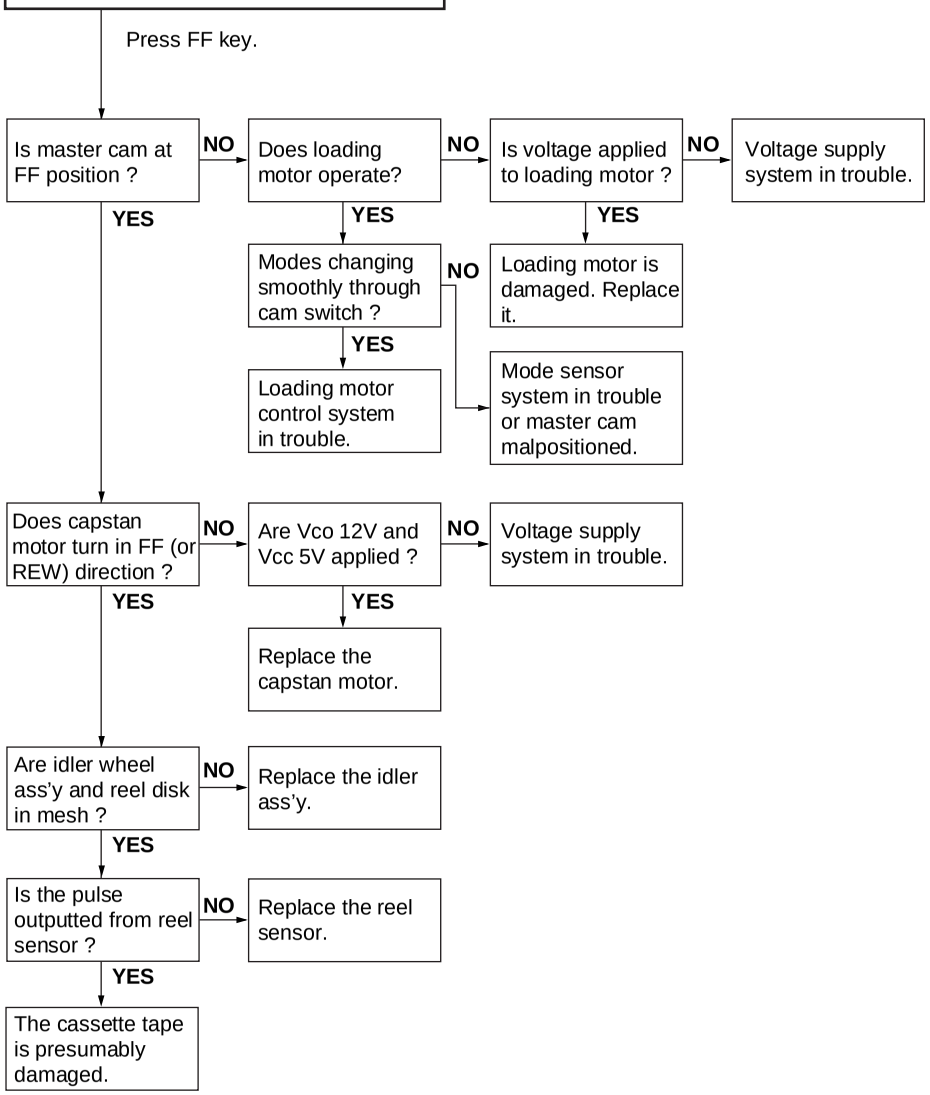

2. REC/PLAY FAILURE (MODE RELEASE)

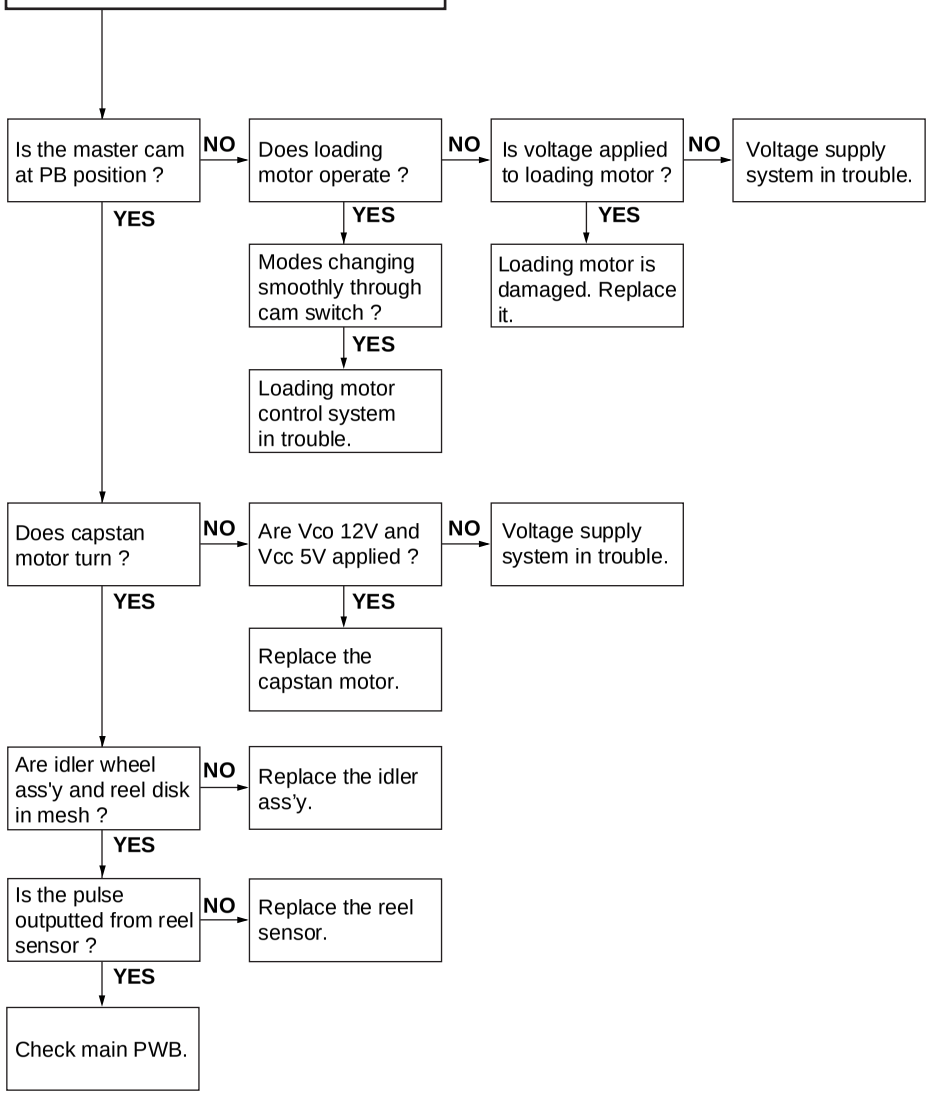

3. WINDING FAILURE AT VSR

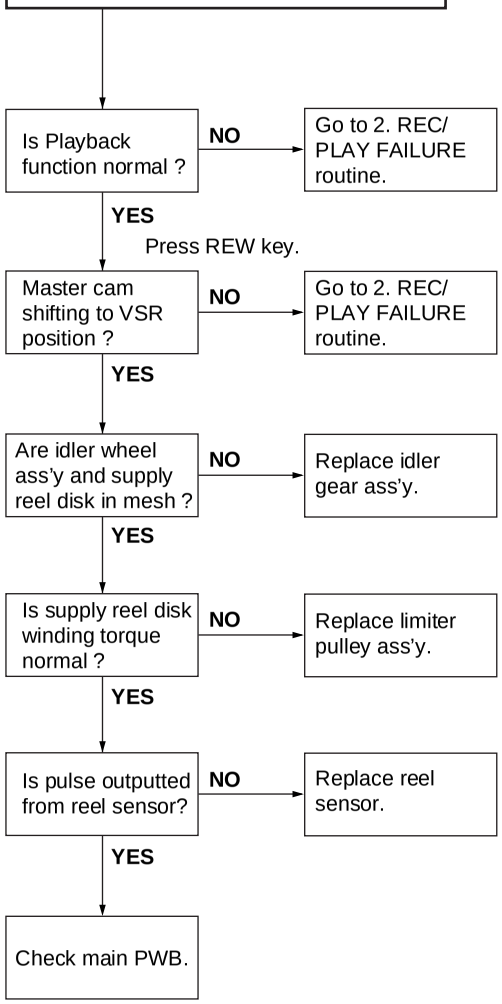

4. UNUSUAL SOUND IN EACH MODE

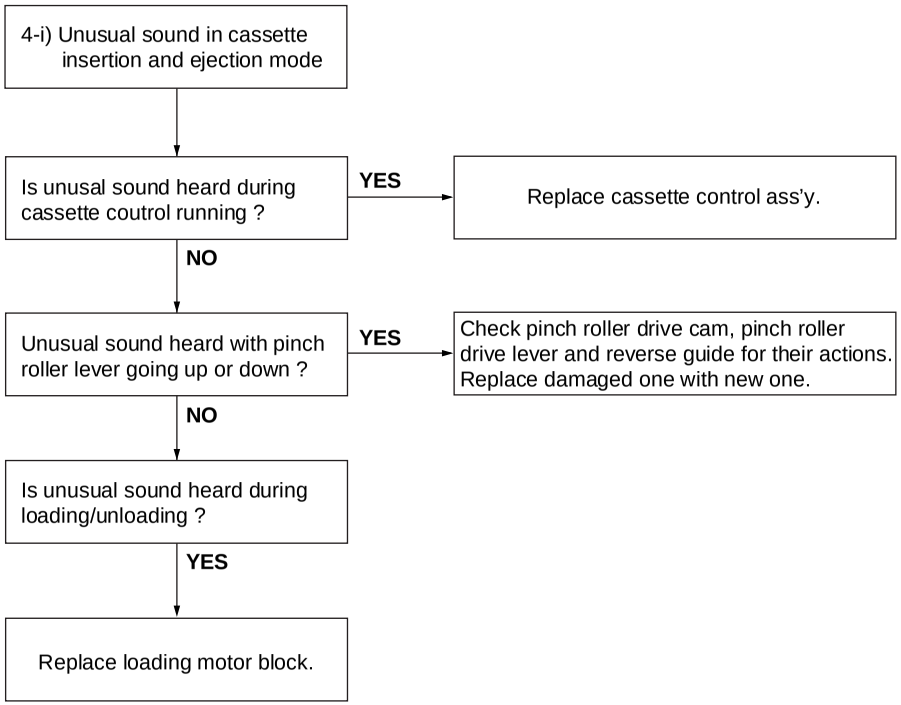

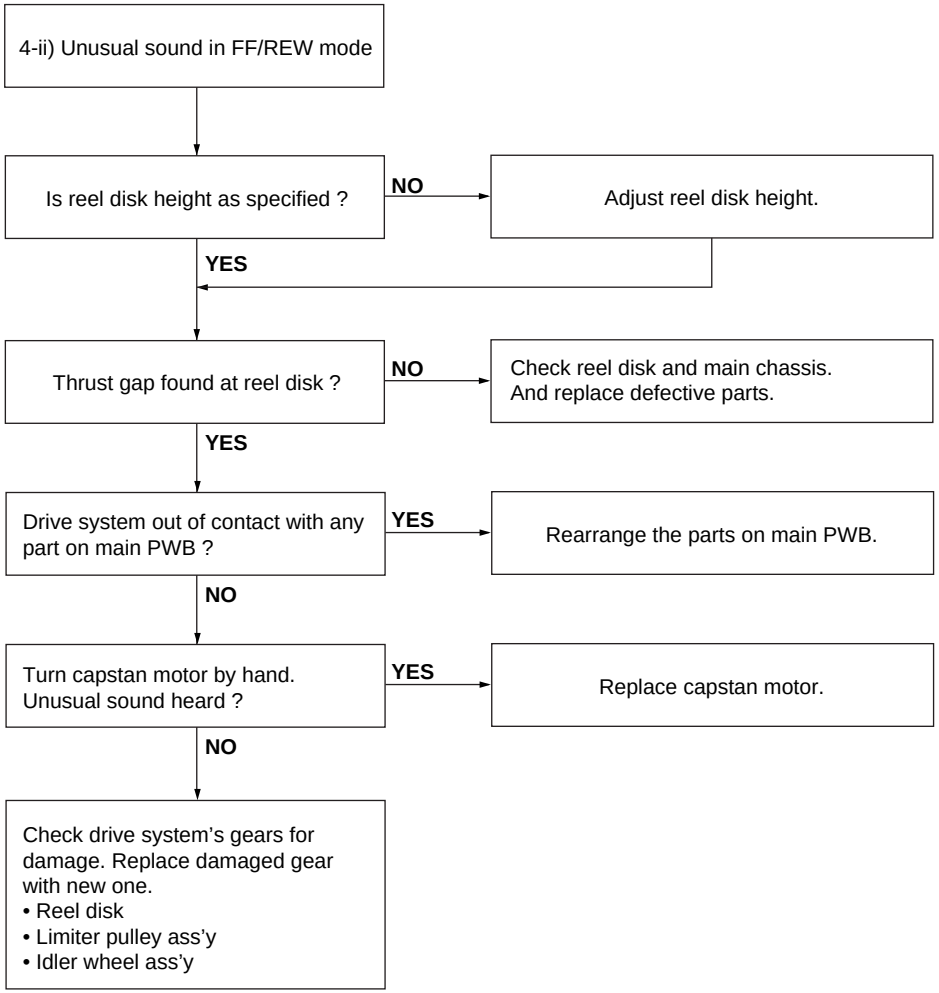
4-ii) Unusual sound in FF/REW mode
Is reel disk height as specified ?
NO
Adjust reel disk height.
YES
Thrust gap found at reel disk ?
NO
Check reel disk and main chassis.
And replace defective parts.
YES
Drive system out of contact with any part on main PWB ?
YES
Rearrange the parts on main PWB.
NO
Turn capstan motor by hand.
Unusual sound heard ?
YES
Replace capstan motor.
NO
Check drive system's gears for damage. Replace damaged gear with new one.
• Reel disk
• Limiter pulley ass'y
• Idler wheel ass'y

7. TROUBLESHOOTING

FLOW CHART NO.1 POWER TROUBLESHOOTING(1)

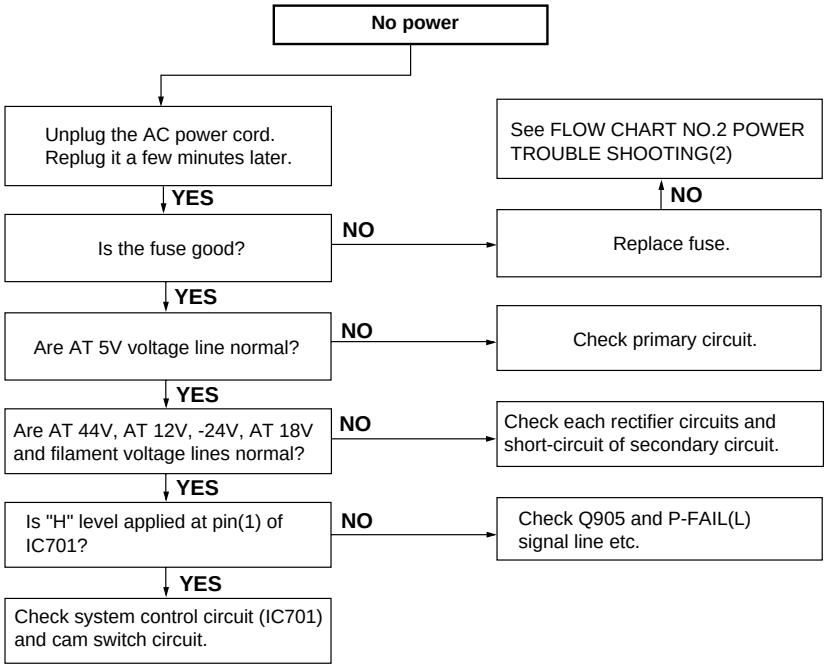

FLOW CHART NO.2 POWER TROUBLESHOOTING(2)

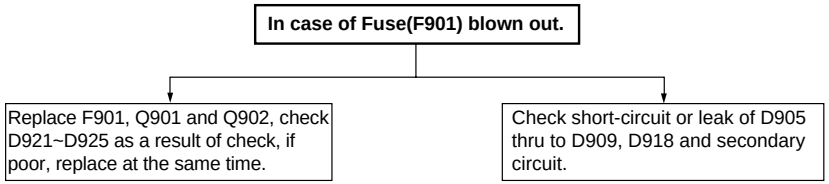

FLOW CHART NO.3 POWER TROUBLESHOOTING(3)

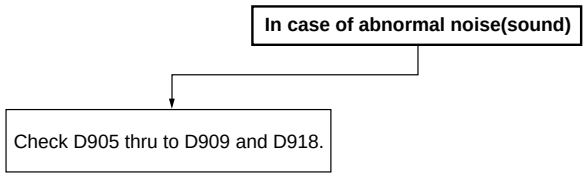

FLOW CHART NO.4 POWER TROUBLESHOOTING(4)

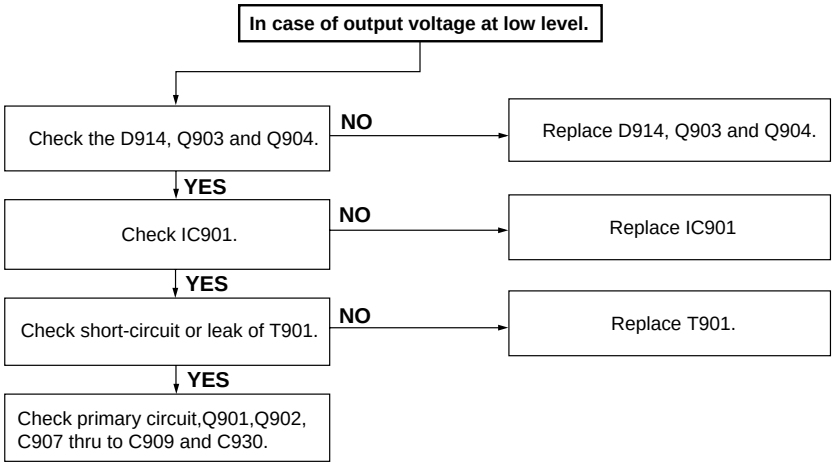

FLOW CHART NO.5 TIMER(1) TROUBLESHOOTING

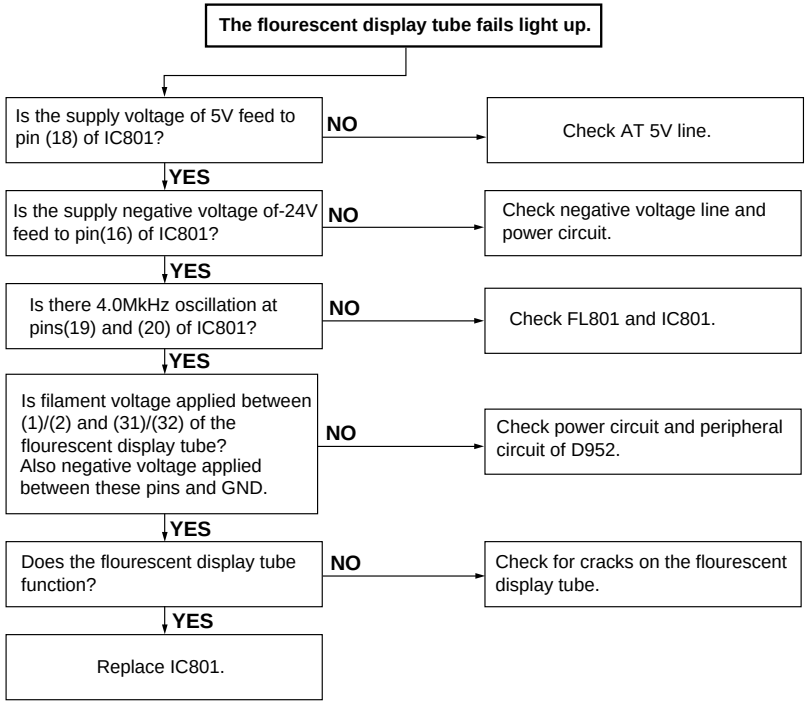

FLOW CHART NO.6 TIMER(2) TROUBLESHOOTING

Key-in input is not received.

Does the key switch make good contact? — NO → Check switch contact.

YES ↓

Is there a short in the scan outs or key inputs? — YES → Check all the terminals of IC801 and switches for poor soldering.

NO ↓

Are pulses received at pins(27) thru (29) of IC801 when the keys are activated? — NO → Check lines of key in and scan out.

YES ↓

Check IC801, IC701 and FLP data, FLP clock, FLP CS and key data.

FLOW CHART NO.7 INFRARED R/C TROUBLESHOOTING

No operation is possible from the infrared remote control.

Does the infrared remote control function? — NO → Replace infrared remote control as required.

NO ↓

Is the supply voltage of 5V feed to Vdd terminal of remote control receiver? — NO → Check AT 5V and GND lines.

YES ↓

Is "L" pulse sent out Vout terminal of receiver when the infrared remote control is activated? — NO → Replace receiver.

NO ↓

Check between at Vout terminal of receiver thru to pin(5) of IC701. — NO → Replace IC701.

FLOW CHART NO.8 CASSETTE CONTROL TROUBLESHOOTING(1)

A cassette tape is not take in.

Is the cassette housing distroted? — YES → Fix or replace the cassette housing.

NO ↓

Are start sensor cover go to open when the cassette tape is inserted? — NO → Check start sensor cover.

YES ↓

Does pin (79) of IC701 change from "H" to "L" level when the cassette tape is inserted? — NO → Check start sensor and all the way up thru to pin (79) of IC701.

YES ↓

Does pin (2) of IC705 go to a "H" (about 1.7V)level when the cassette tape is inserted? — NO → Check IC701 and all the way up thru to pin (2) of IC705.

YES ↓

Does pin (5) of IC705 change to about 10V when the cassette tape is inserted? — NO → Check IC705.

YES ↓

Is the specified voltage applied at the loading motor terminal when the cassette tape is inserted? — YES → Check between IC705 and loading motor.

YES ↓

Replace loading motor.

FLOW CHART NO.9 CASSETTE CONTROL TROUBLESHOOTING(2)

A cassette tape is taken in, but ejected at once.

Does the start sensor pulse at pin (79) of IC701 change from "L" to "H" level when the cassette tape is loaded? — NO → Check start sensor and all the way up thru to IC701.

YES ↓

Does the end sensor pulse at pin(85) of IC701 change from "L" to "H" level when the cassette tape is loaded? — NO → Check end sensor and all the way up thru to IC701.

YES ↓

Does the master cam mode shifter operate normally when the cassette tape is loaded? — NO → Check cam switch and all the way up thru to IC701.

YES ↓

Replace IC701.

FLOW CHART NO.10 LOADING MOTOR AND EJECT TROUBLESHOOTING

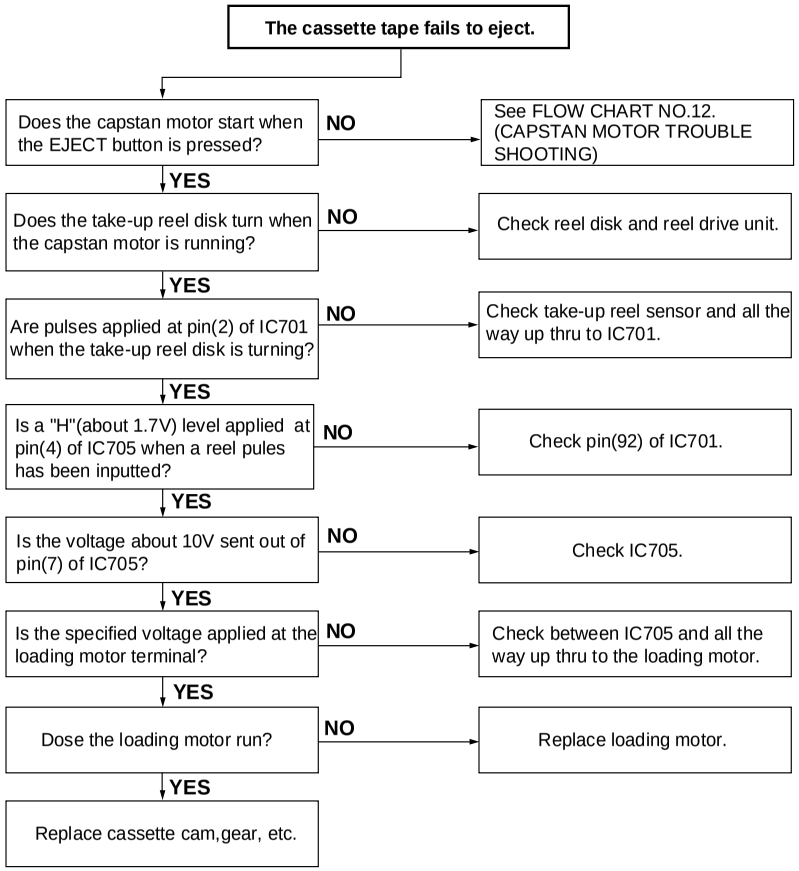

FLOW CHART NO.11 SYSTEM CONTROL TROUBLESHOOTING

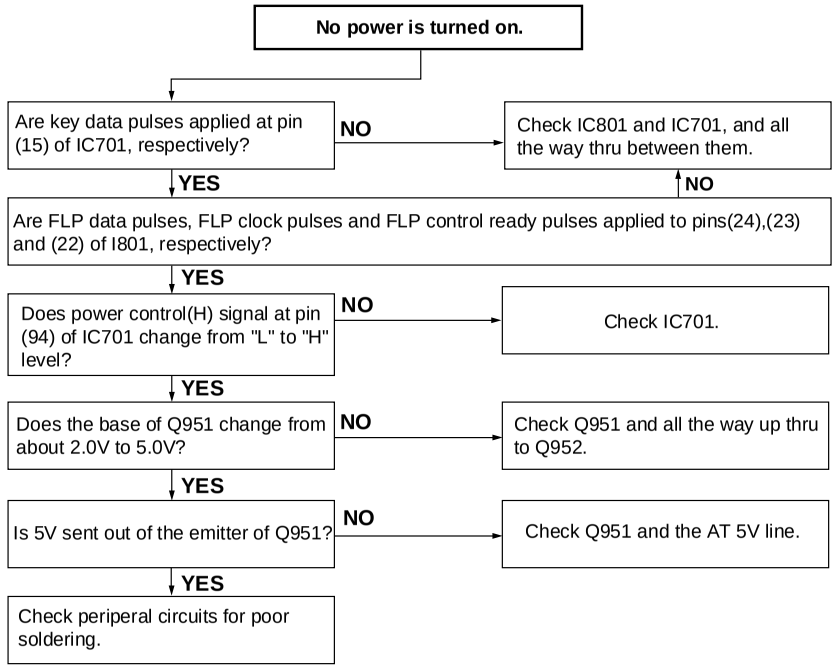

FLOW CHART NO.12 CAPSTAN MOTOR TROUBLESHOOTING

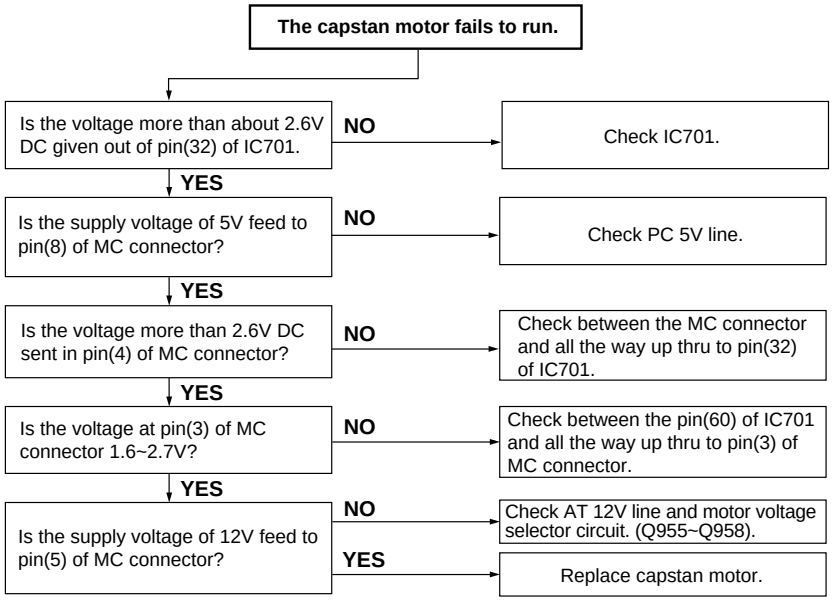

FLOW CHART NO.13 DRUM MOTOR TROUBLESHOOTING(1)

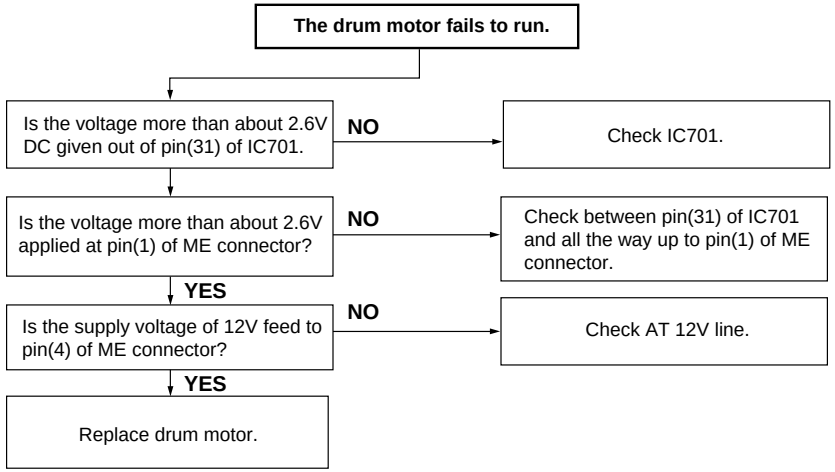

FLOW CHART NO.14 DRUM MOTOR TROUBLESHOOTING(2)

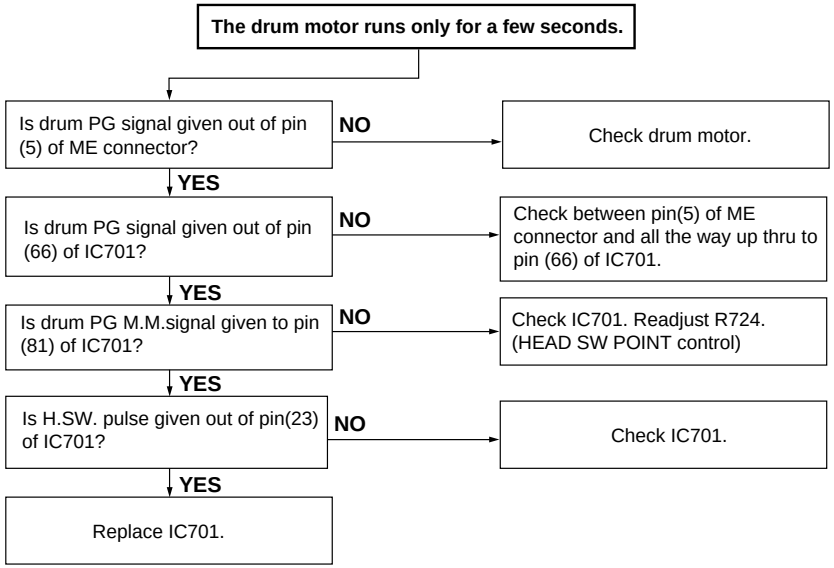

FLOW CHART NO.15 HEAD SWITCHING PULSE TROUBLESHOOTING.

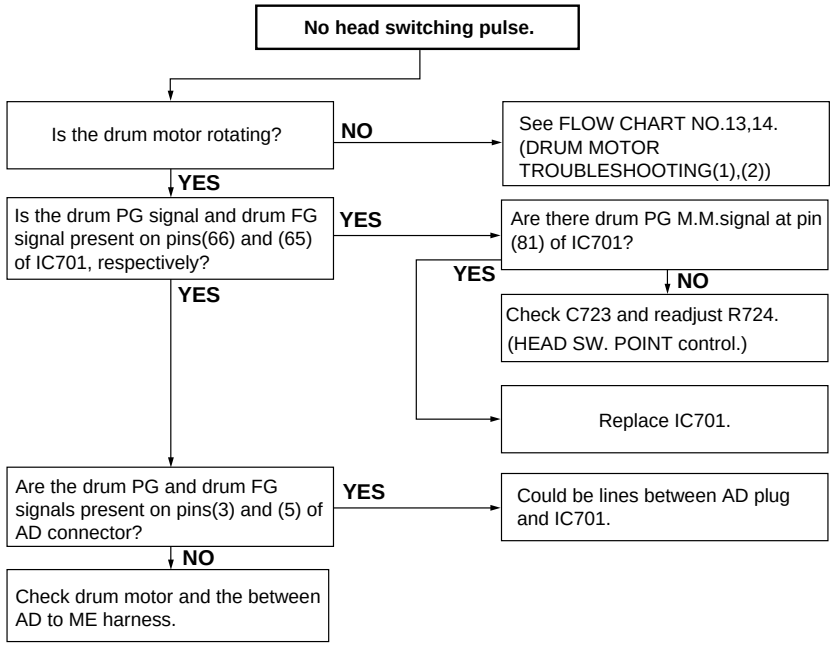

FLOW CHART NO.16 DRUM SERVO TROUBLESHOOTING

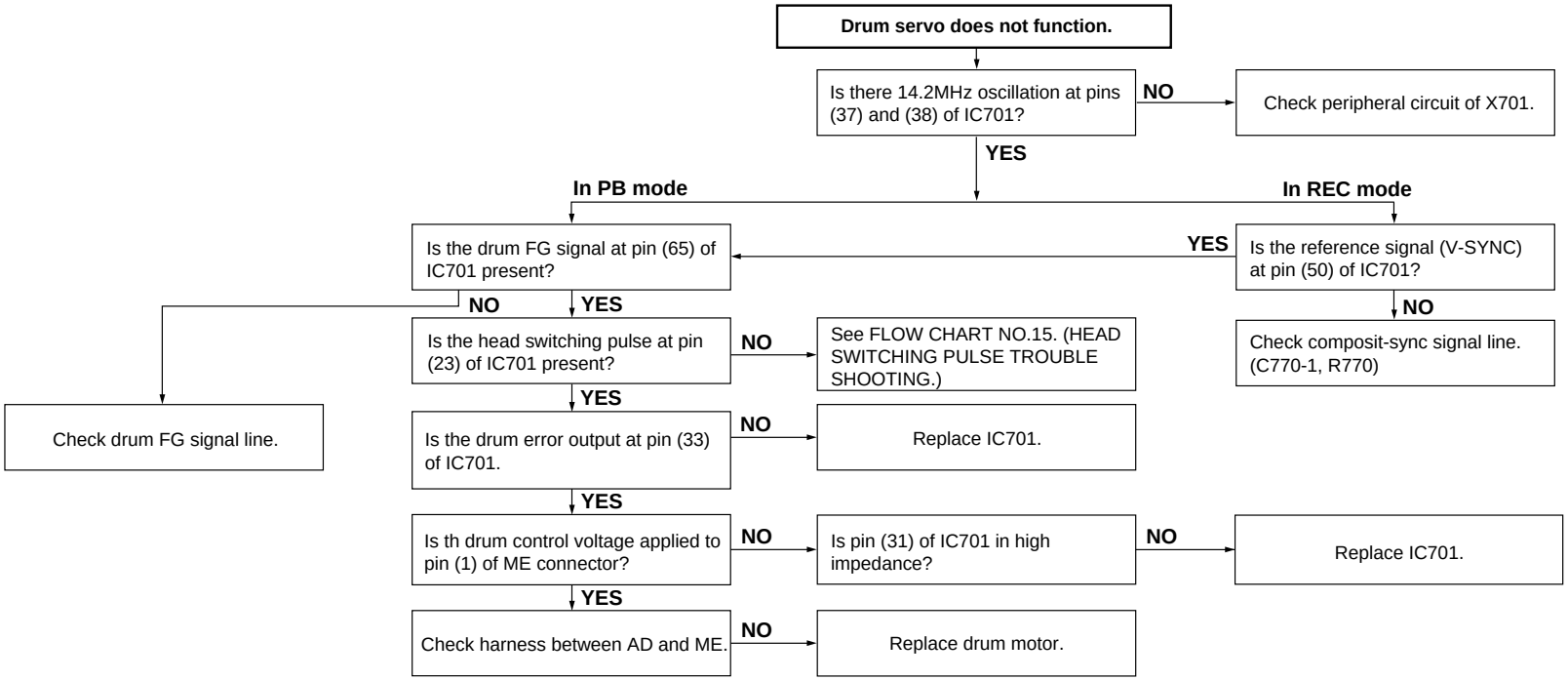

FLOW CHART NO.17 CAPSTAN SERVO TROUBLESHOOTING

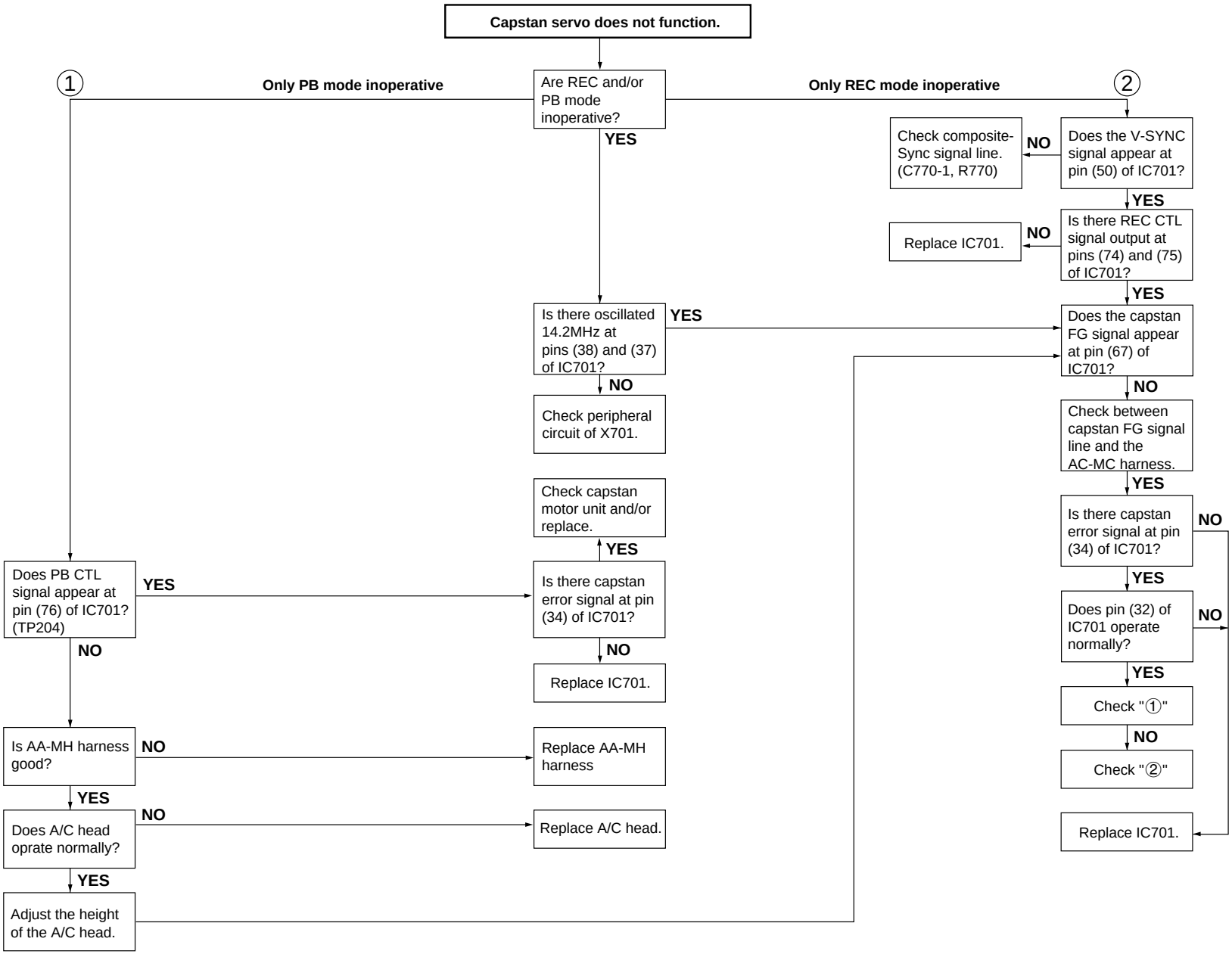

FLOW CHART NO.18

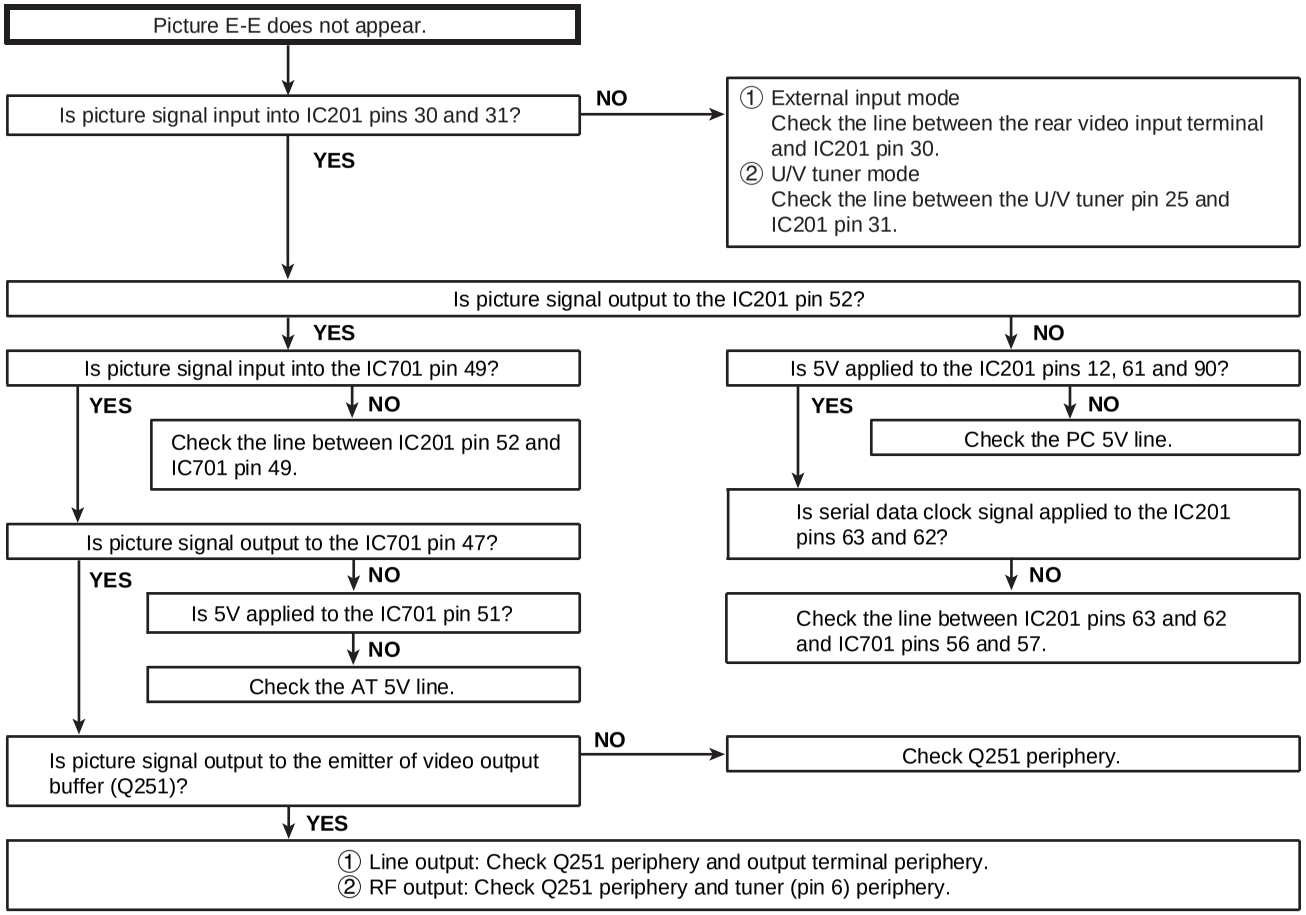

FLOW CHART NO.19

Picture (luminance) record is impossible (E-E mode is possible).

- Is luminance signal (approx. 0.5 Vp-p) input to the IC201 pin 19?
  - NO → Check between the IC201 pin 18 and pin 19. (Check C206.)
  - YES ↓
- Is luminance signal (approx. 0.3 Vp-p) input to the IC201 pin 42?
  - NO → Check between the IC201 pin 21 and pin 42. (Check C208.)
  - YES ↓
- Is luminance signal (approx. 0.5 Vp-p) input to the IC201 pin 26?
  - NO → Check between the IC201 pin 39 and pin 26. (Check C212.)
  - YES ↓
- Is luminance signal (approx. 0.5 Vp-p) input to the IC201 pin 39?
  - NO ↓
- Is voltage 5V applied to the CCD section power terminal IC201 pin 36?
  - YES ↓
- Is CCD control voltage approx. 5V applied normally to the pin 37 from the IC201 pin 57? Is clock signal (approx. 7.16 MHz/0.5 Vp-p) for CCD applied normally to the pin 44 from the IC201 pin 69?
- Is luminance signal (approx. 0.5 Vp-p) input to the IC201 pin 23?
  - NO → Check between the IC201 pin 24 and pin 23. (Check C210.)
  - YES ↓
- Is the luminance signal (approx. 0.5 Vp-p) input and output to the IC201 pins 13 and 14, respectively?
  - NO → Check the IC201 pins 13 and 14 peripheral circuit. (R201, R202, C203)
  - YES ↓

FLOW CHART NO.20

Although picture record is possible, color does not appear (E-E mode is possible).

- Is voltage 5V applied to the chroma power terminal IC201 pin 61?
  - NO → Check the periphery of IC201 pin 61 and PC 5V line.
  - YES ↓
- Is chroma signal (approx. 143 mVp-p/Burst) input into the IC201 pin 46?
  - NO → Check between the IC201 pin 60 and pin 46. (Check C512.)
    - YES ↓
    - Check whether the IC201 pins 71 and 73 oscillate (3.58 MHz)?
  - YES ↓
- Is chroma signal (approx. 180 mVp-p/Burst) input into the IC201 pin 58?
  - NO → Check between the IC201 pin 58 and pin 35. (Check R505, C512.)
    - YES ↓
    - Is chroma signal (approx. 180 mVp-p/Burst) output to the IC201 pin 35?
      - NO → Is voltage 5V applied to the CCD section power terminal IC201 pin 36?
  - YES ↓

SP mode: Is record FM signal (approx.20 mAp-p) output to the IC201 pins 88 and 89 (SP1) and pins 86 and 87 (SP2)?
EP mode: Is record FM signal (approx.20 mAp-p) output to the IC201 pins 93 and 94 (EP1) and pins 92 and 91 (EP2)?

- YES → Check or replace the cylinder.
- NO → Is PRE/REC Vcc 5V applied to the IC201 pin 90?

FLOW CHART NO.21

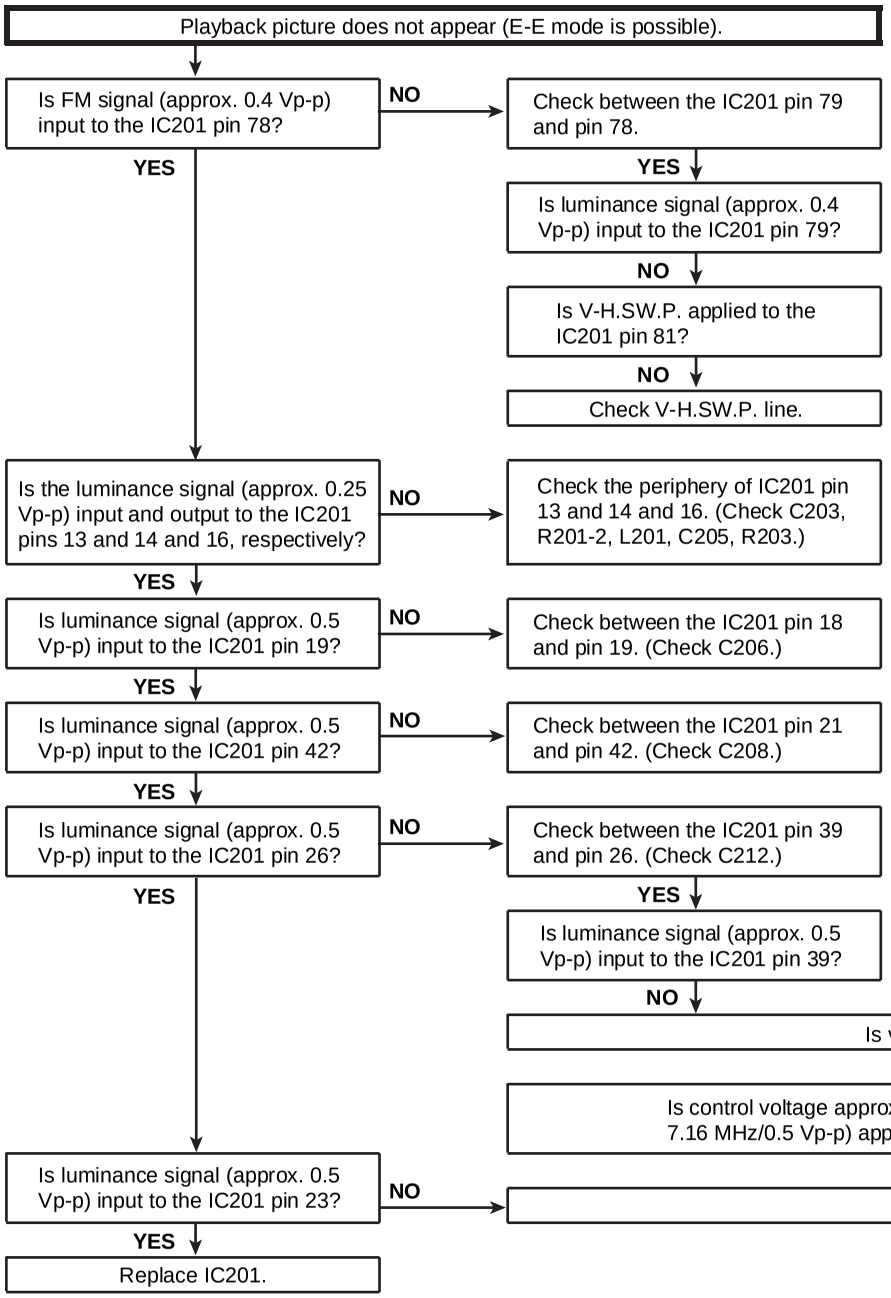

FLOW CHART NO.22

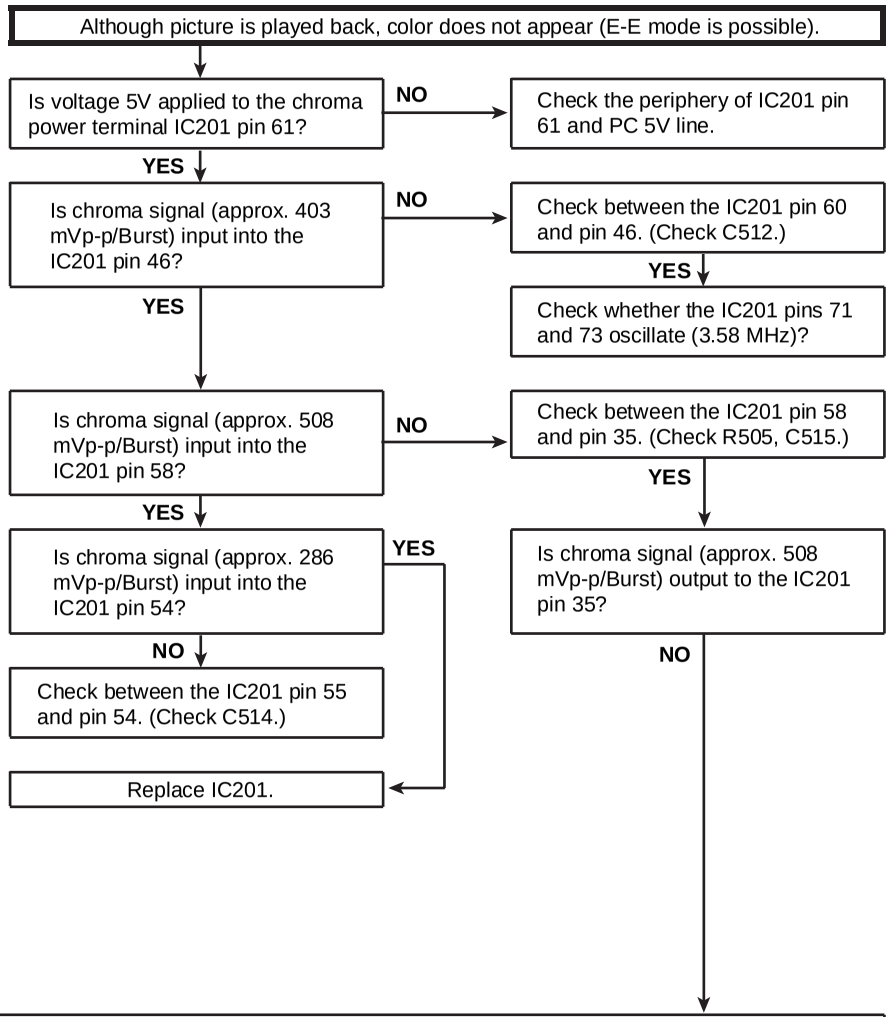

Is voltage 5V applied to the CCD section power terminal IC201 pin 36?

YES

Is control voltage approx. 5V applied normally to the pin 37 from the IC201 pin 57? Is CCD clock signal (approx. 7.16 MHz/0.5 Vp-p) applied to the pin 44 from the IC201 pin 69?

NO

Check between the IC201 pin 24 and pin 23. (Check C210.)

FLOW CHART NO.23 Hi-Fi TROUBLESHOOTING

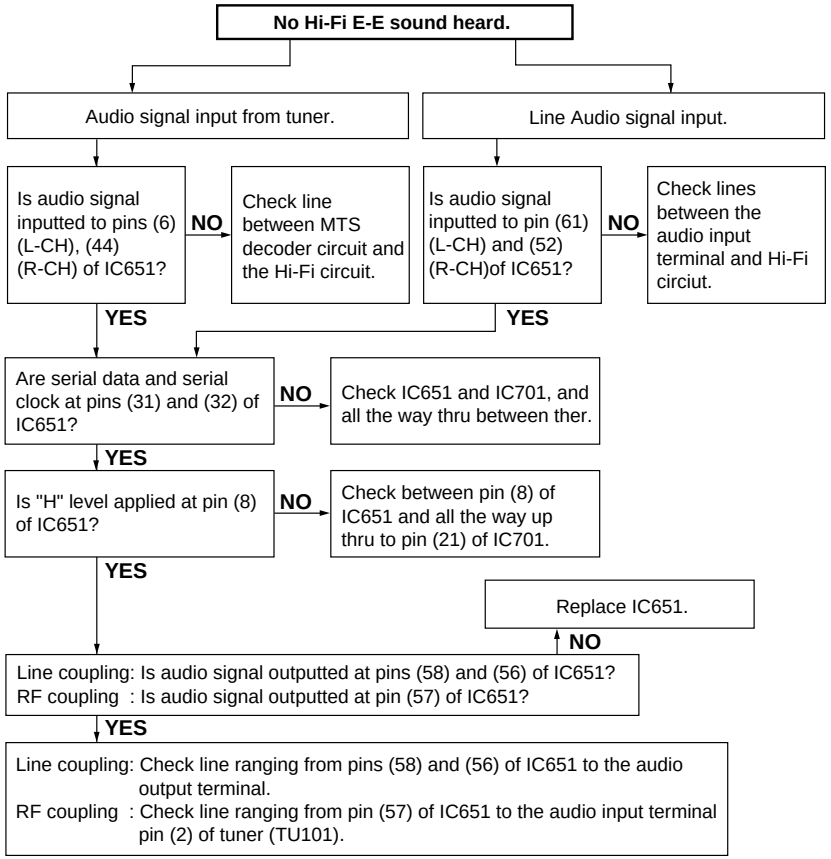

FLOW CHART NO.24

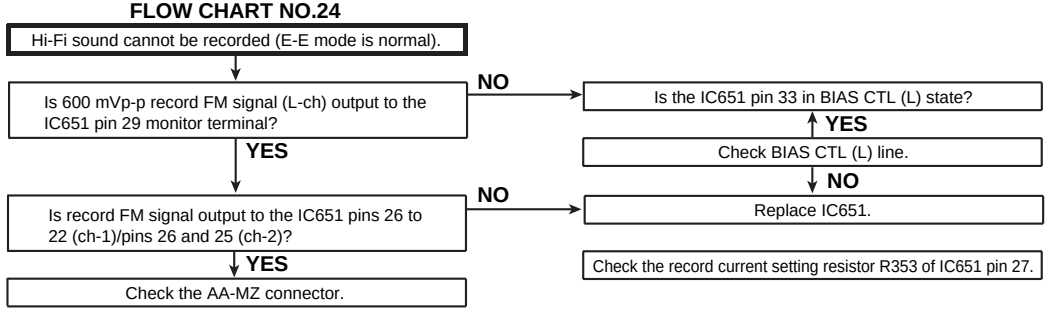

FLOW CHART NO.25

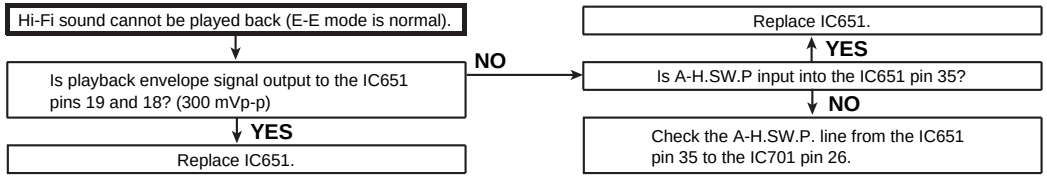

FLOW CHART NO.26

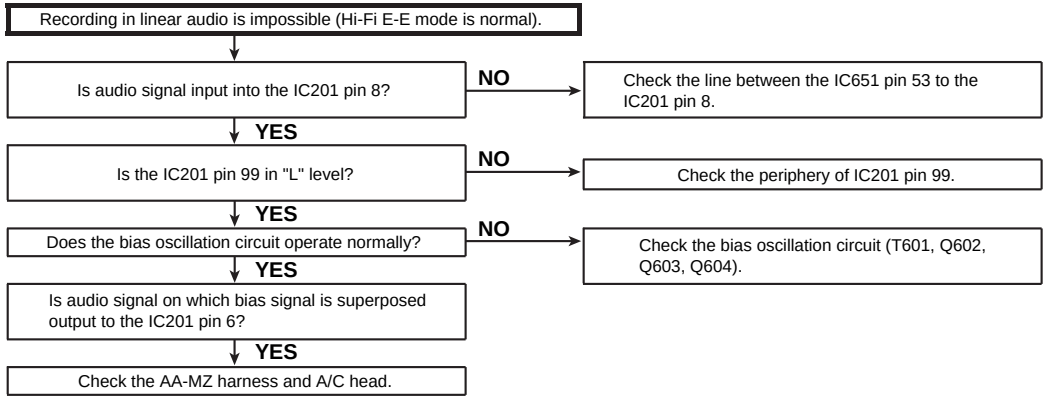

FLOW CHART NO.27

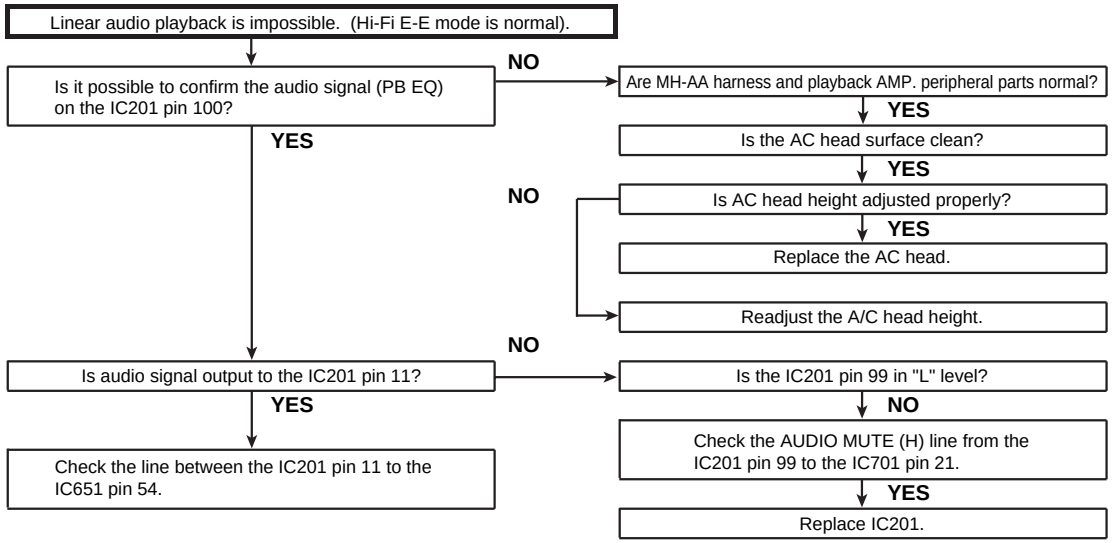

FLOW CHART NO.29 LINEAR SOUND RECORDING MODE TROUBLESHOOTING

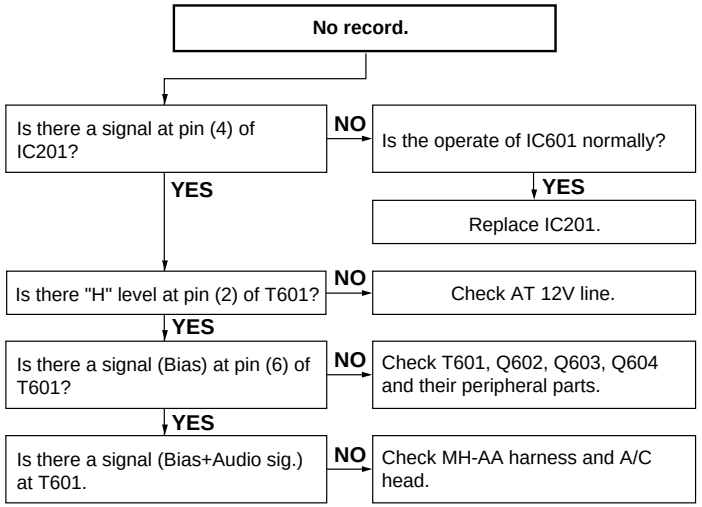

FLOW CHART NO.28 LINEAR SOUND E-E MODE TROUBLESHOOTING

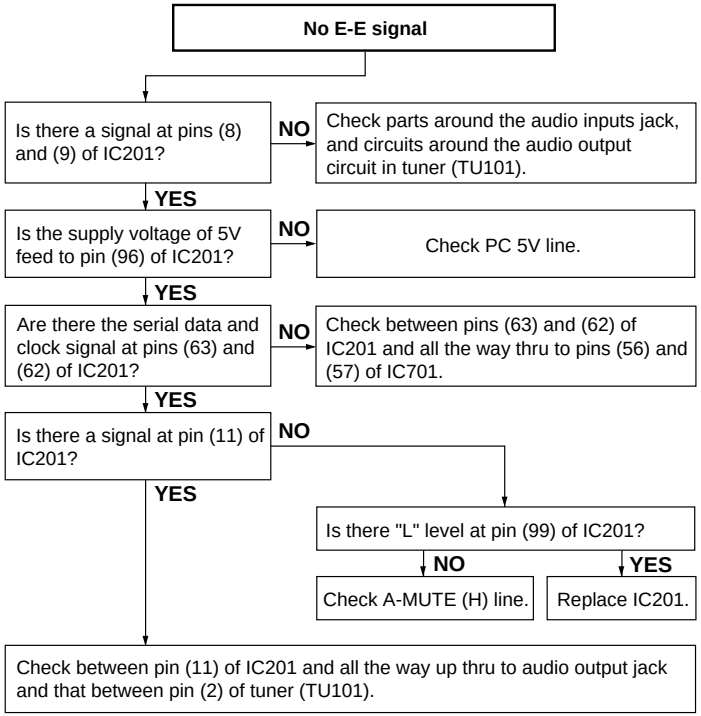

FLOW CHART NO.30 LINEAR SOUND PLAYBACK MODE TROUBLESHOOTING

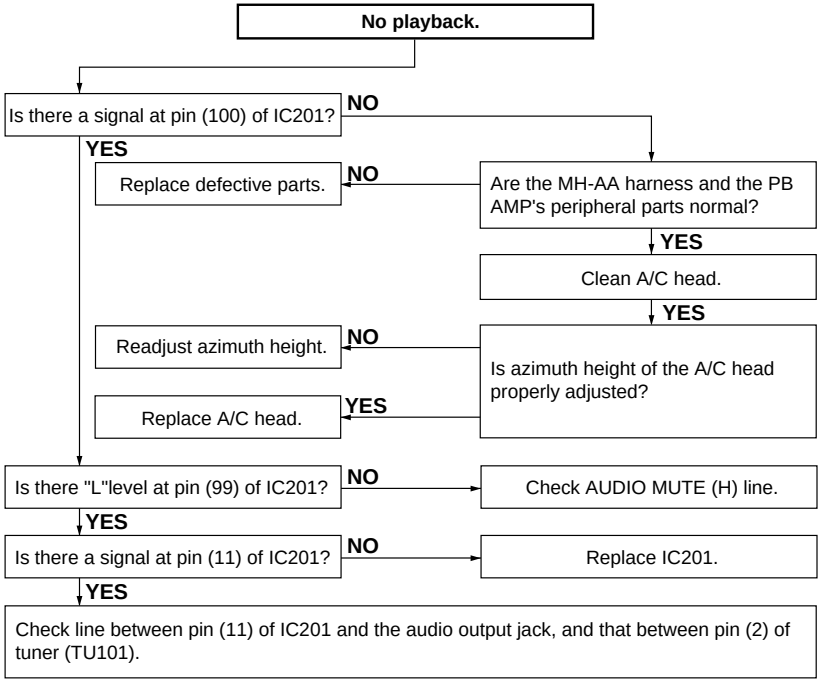

8. BLOCK DIAGRAM

POWER CIRCUIT BLOCK DIAGRAM

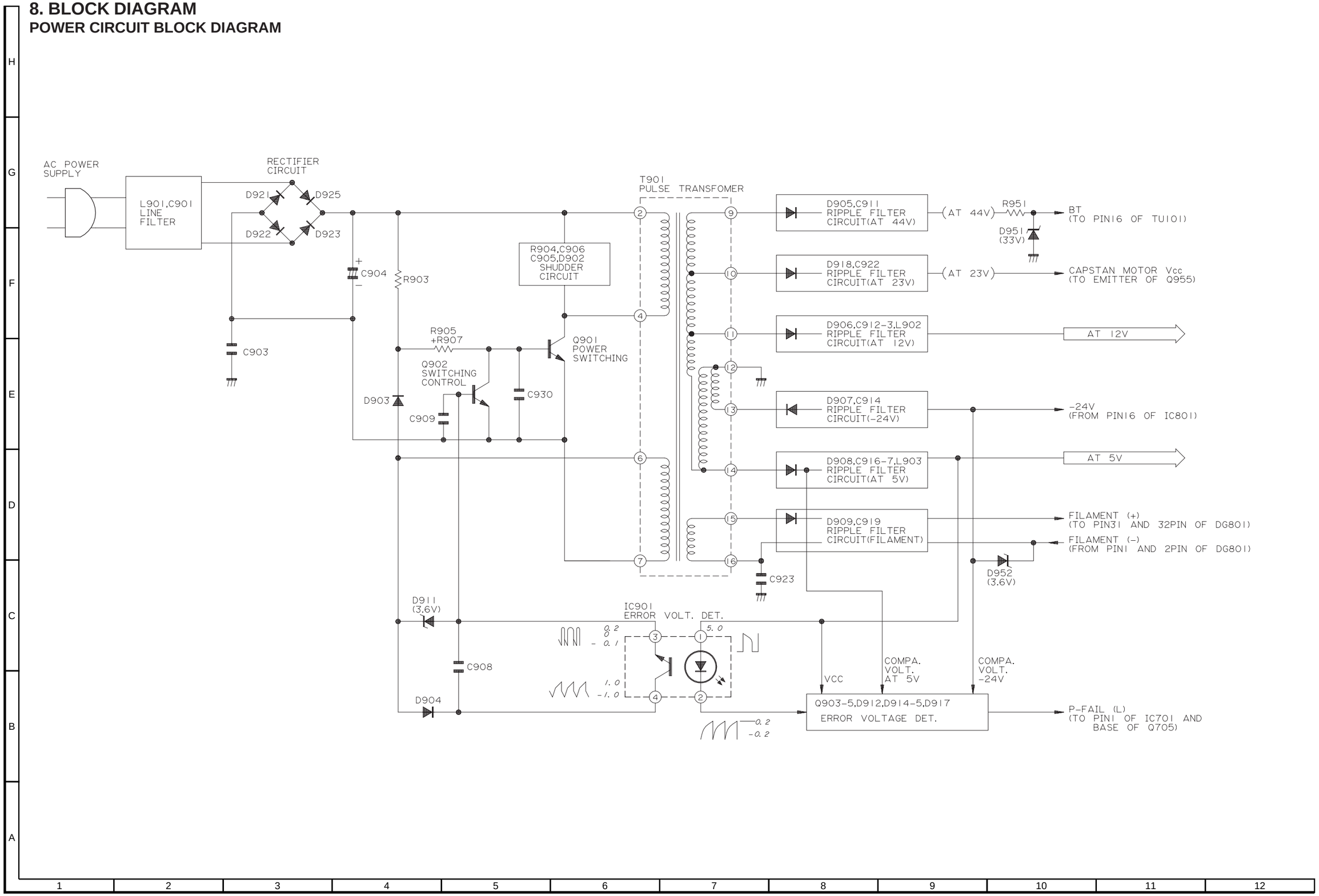

SYSTEM SERVO BLOCK DIAGRAM

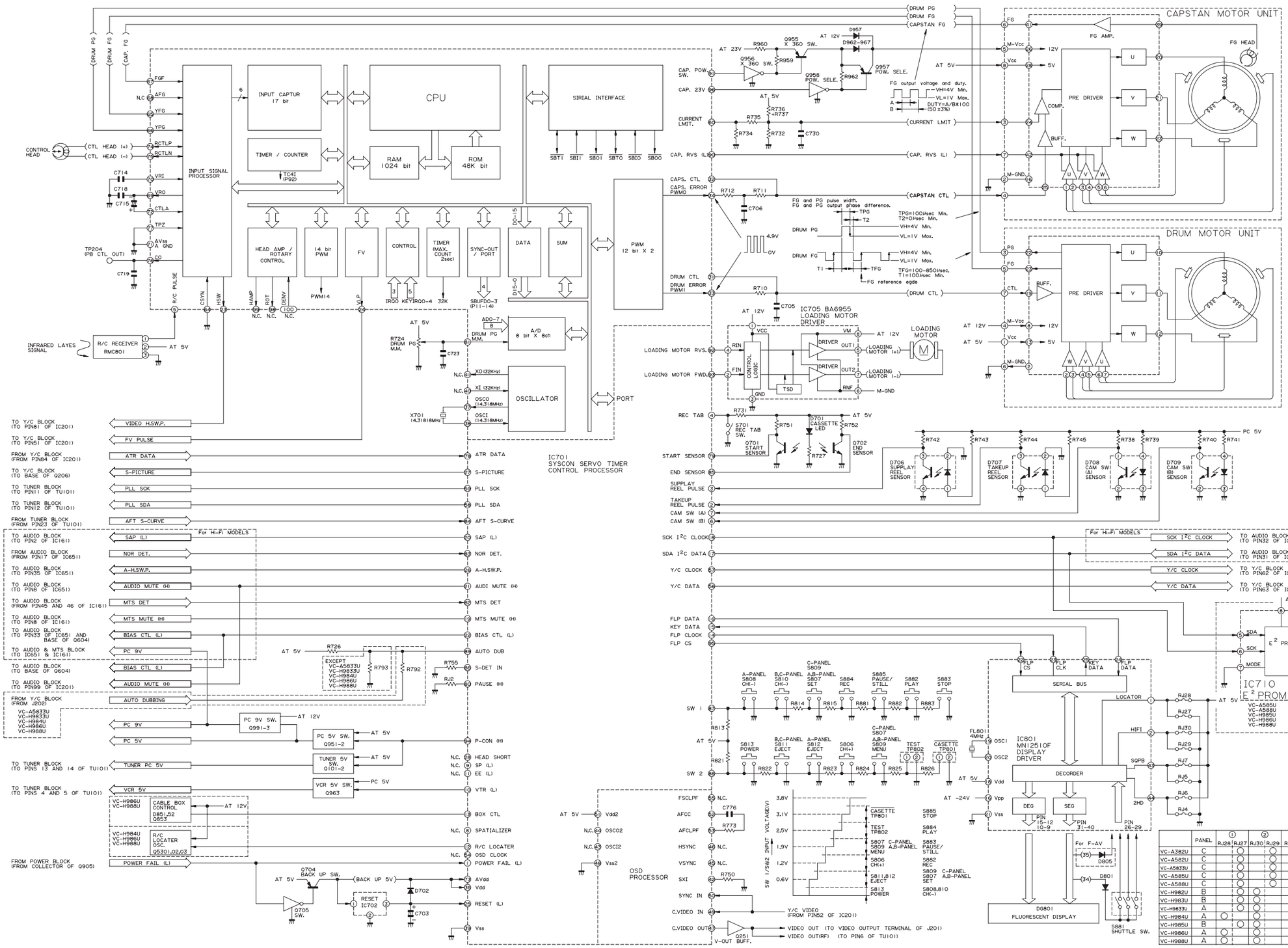

	PANEL	① RJ28	RJ27	② RJ30	RJ29	④③ RJ7	RJ5	④④ RJ6	RJ4
VC-A382U	C		○		○		○		○
VC-A582U	C		○		○		○		○
VC-A5833U	C		○		○		○		○
VC-A585U	C		○		○		○		○
VC-A588U	C		○		○		○		○
VC-H982U	B		○	○			○		○
VC-H983U	B		○	○			○		○
VC-H9833U	A		○	○			○		○
VC-H984U	A	○		○			○		○
VC-H985U	B		○	○			○		○
VC-H986U	A	○		○			○		○
VC-H988U	A	○		○			○		○

SIGNAL FLOW BLOCK DIAGRAM (VC-A382U/A582U/A5833U)

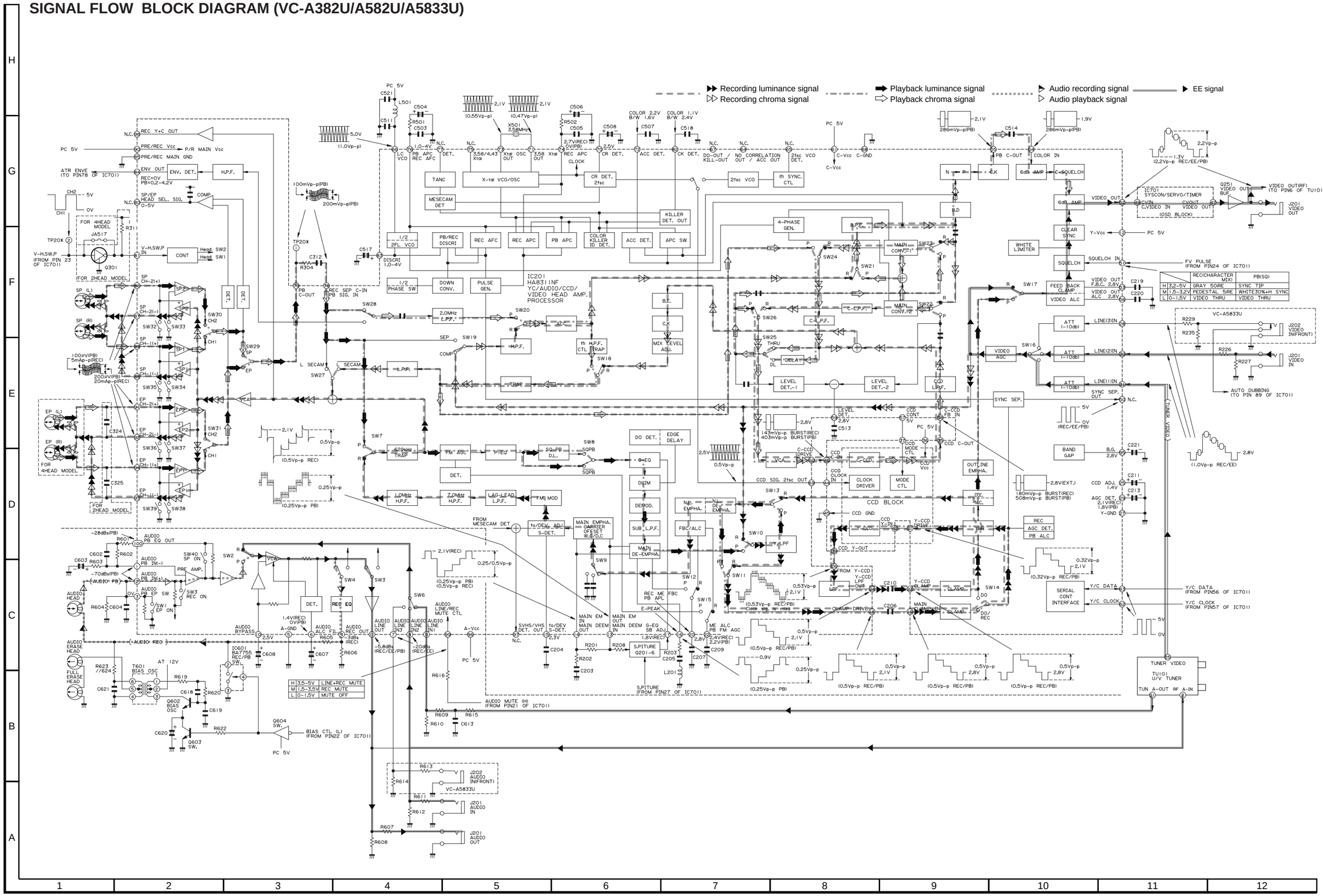

55 56

VC-A382U VC-A582U
VC-A5833U VC-H982U
VC-H9833U VC-H983U

SIGNAL FLOW BLOCK DIAGRAM (VC-H982UH983U/H9833U)

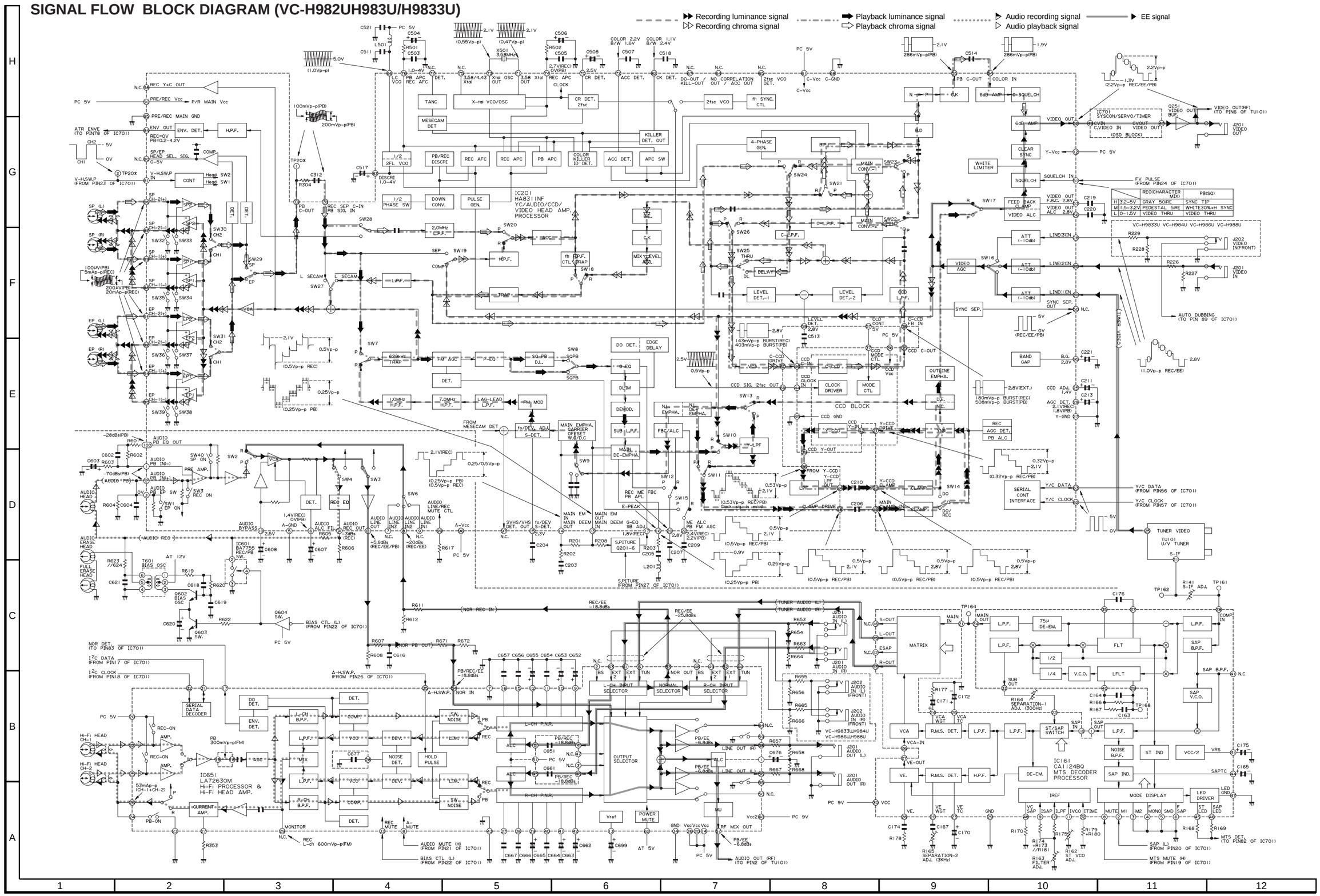

VC-A382U VC-A582U
VC-A5833U VC-H982U
VC-H9833U VC-H983U

SCHEMATIC DIAGRAM

IMPORTANT SAFETY NOTICE:

PARTS MARKED WITH " ⚠ " (▭) ARE IMPORTANT FOR MAINTAINING THE SAFETY OF THE SET.
BE SURE TO REPLACE THESE PARTS WITH SPECIFIED ONES FOR MAINTAINING THE SAFETY AND PERFORMANCE OF THE SET.

AVIS DE SECURITE IMPORTANT:

LES PIECES MARQUEES " ⚠ " (▭) SONT IMPORTANTES POUR MAINTENIR LA SECURITE DE L'APPAREIL.
NE REMPLACER CES PIECES QUE PAR DES PIECES DONT LE NUMERO EST SPECIFIE POUR MAINTENIR LA SECURITE ET PROTEGER LE BON FONCTIONNEMENT DE L'APPAREIL.

- *The indicated voltages in the following diagram are measured with an SSVM, upon receiving color bars (400 Hz sound signal) in either the record mode or the play mode voltage is indicated as follows.*

  4.0 . . . . Record mode (SP)
  (4.0) . . . . PB mode (SP)
  4.0 . . . . LP mode
  4.0 . . . . EP mode

NOTE:
1. The unit of resistance "ohm" is omitted (K: 1000 ohms M: 1 Meg ohm).
2. All resistors are 1/8 watt, unless otherwise noted.
3. All capacitors µF, unless otherwise noted P: µµF.

Voltages and waveform are measured as follows:
- *DC voltages are measured with an SSVM placed between points indicated and chassis ground, with the supply voltage of 120V AC and all controls for normal positions.*

This circuit diagram is a standard one, actual circuits printed may be subject to change for product improvement without prior notice.

VC-A382U VC-A582U VC-A5833U VC-H982U VC-H9833U VC-H983U

9. SCHEMATIC DIAGRAM AND PWB FOIL PATTERN

MAIN CIRCUIT(1)/OPERATION (VC-A382U)

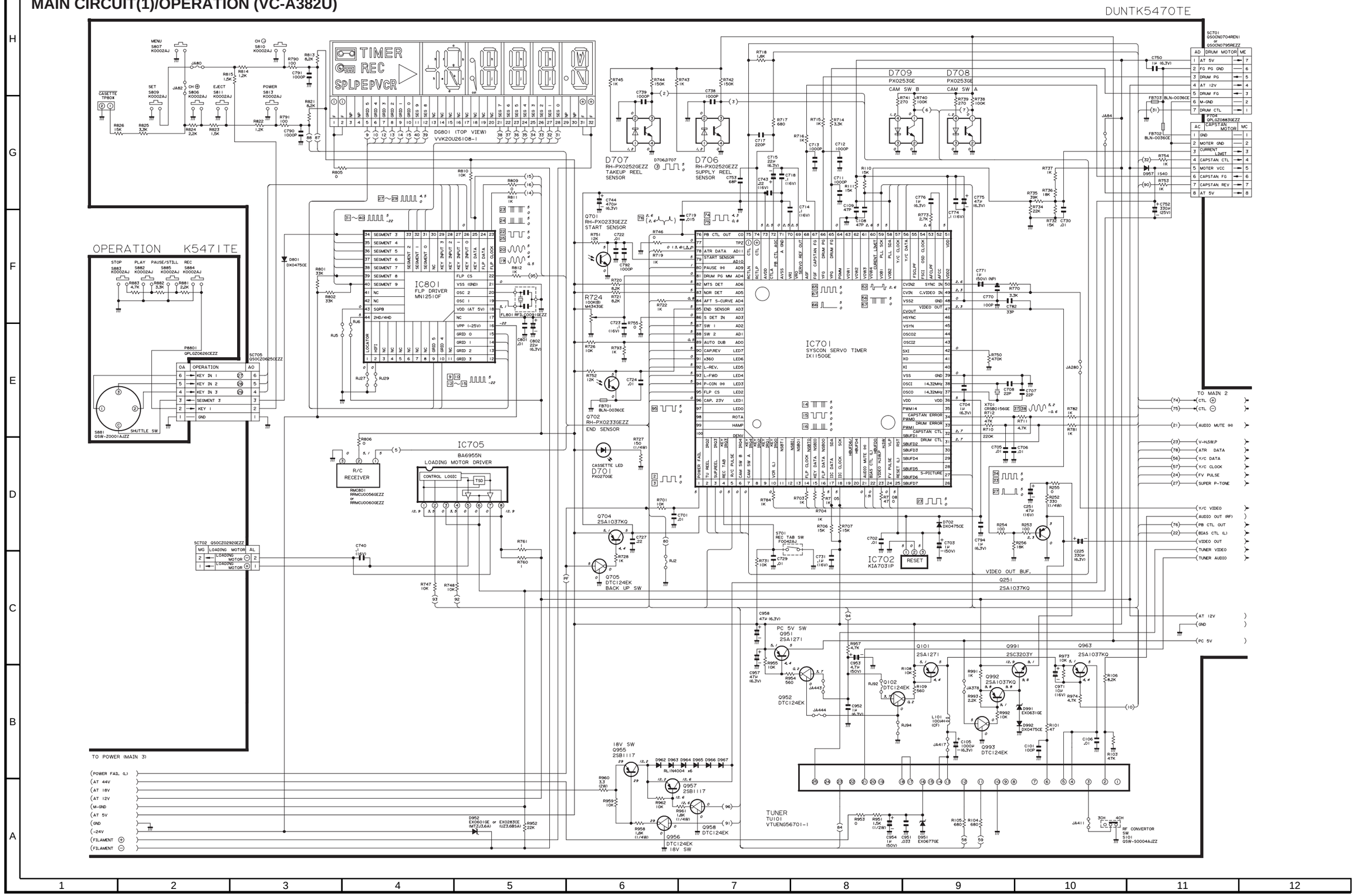

* VOLTAGE MEASUREMENT MODE
PB ..... Parentheses ( )
REC ..... Without Parentheses

MAIN CIRCUIT(1)/OPERATION (VC-A582U)

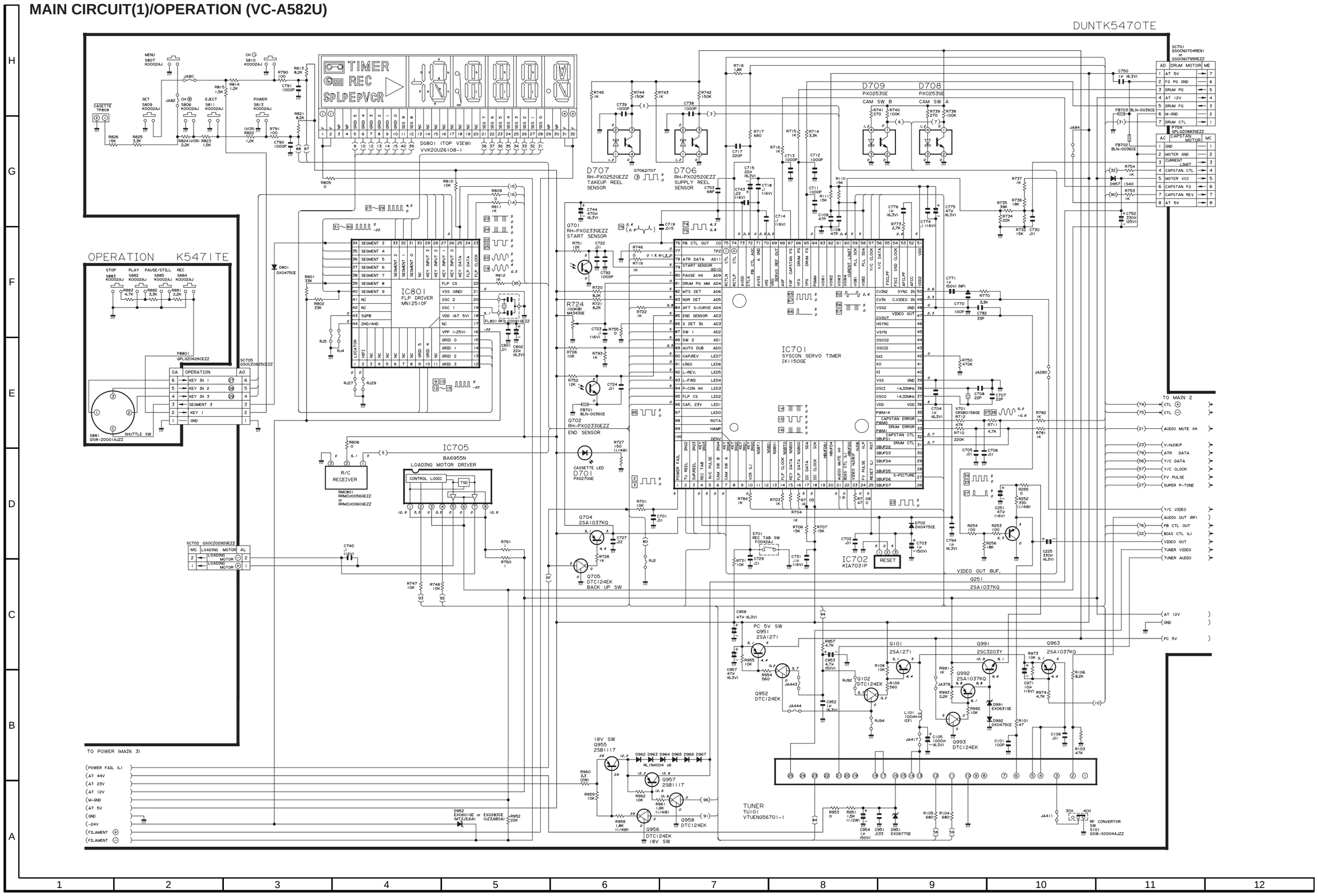

* VOLTAGE MEASUREMENT MODE
PB ..... Parentheses ( )
REC ..... Without Parentheses

MAIN CIRCUIT(1)/OPERATION (VC-A5833U)

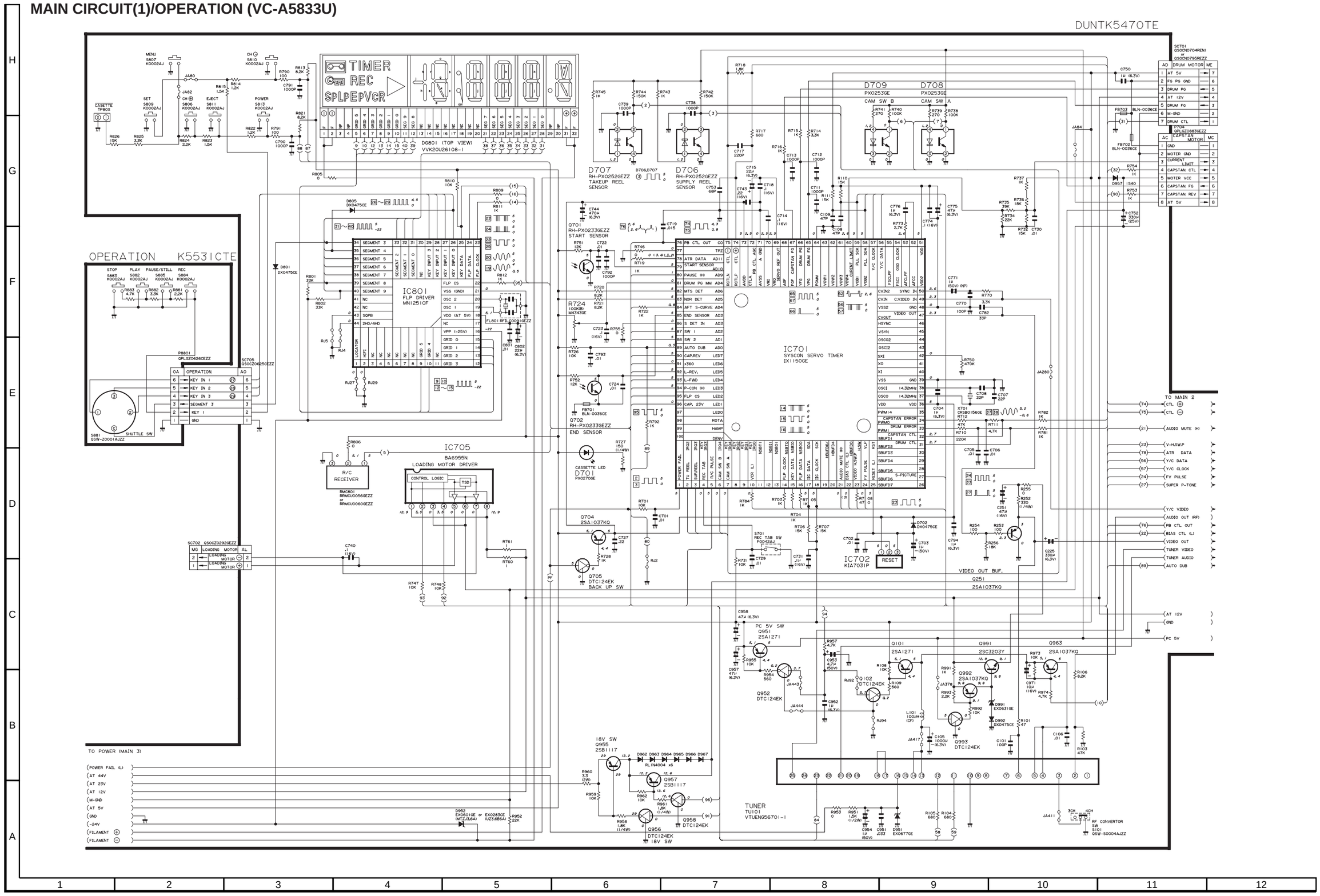

*** VOLTAGE MEASUREMENT MODE**
PB ..... Parentheses ( )
REC ..... Without Parentheses

MAIN CIRCUIT(1)/OPERATION (VC-H982U/H983U)

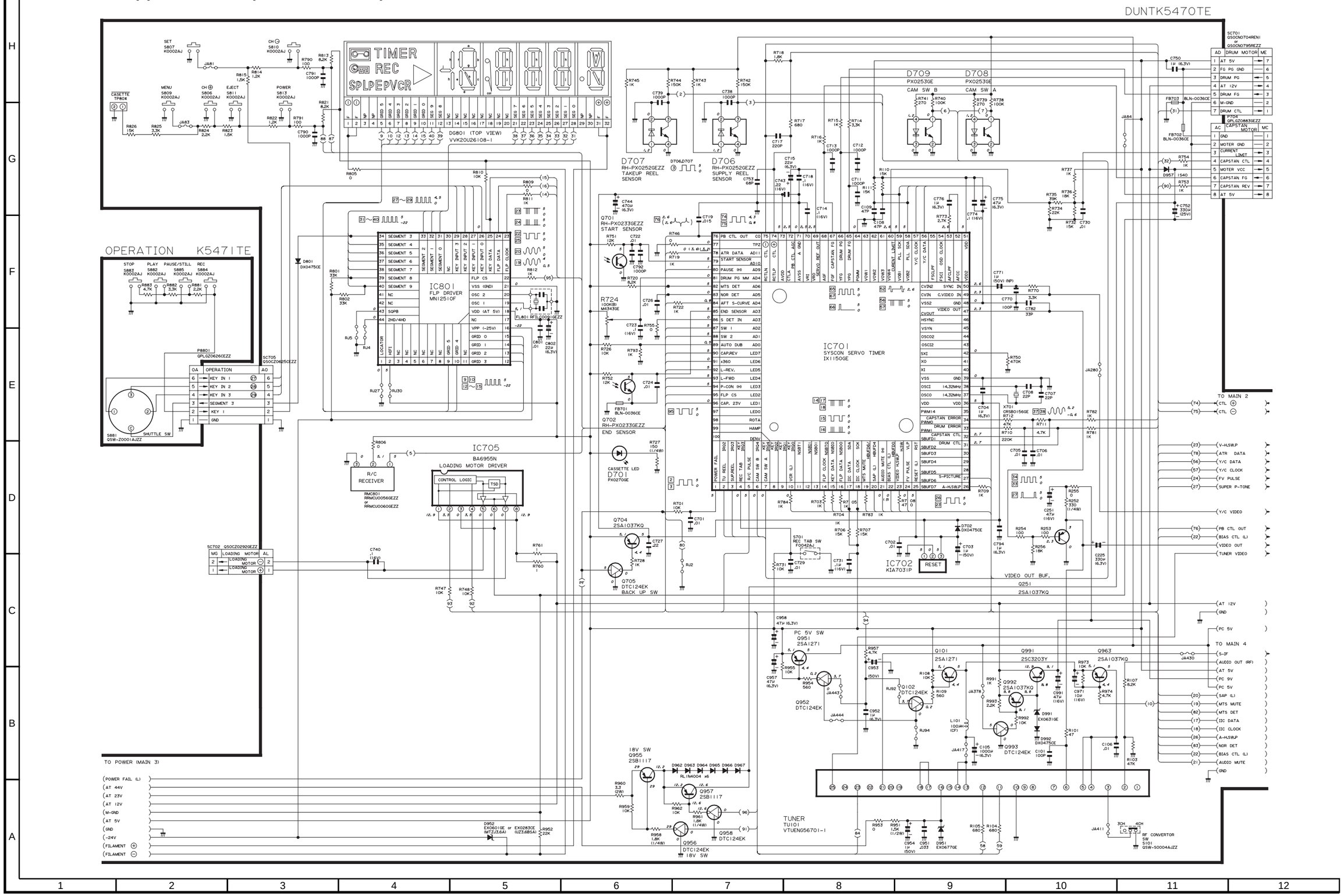

* VOLTAGE MEASUREMENT MODE
PB ..... Parentheses ( )
REC ..... Without Parentheses

MAIN CIRCUIT(1)/OPERATION (VC-H9833U)

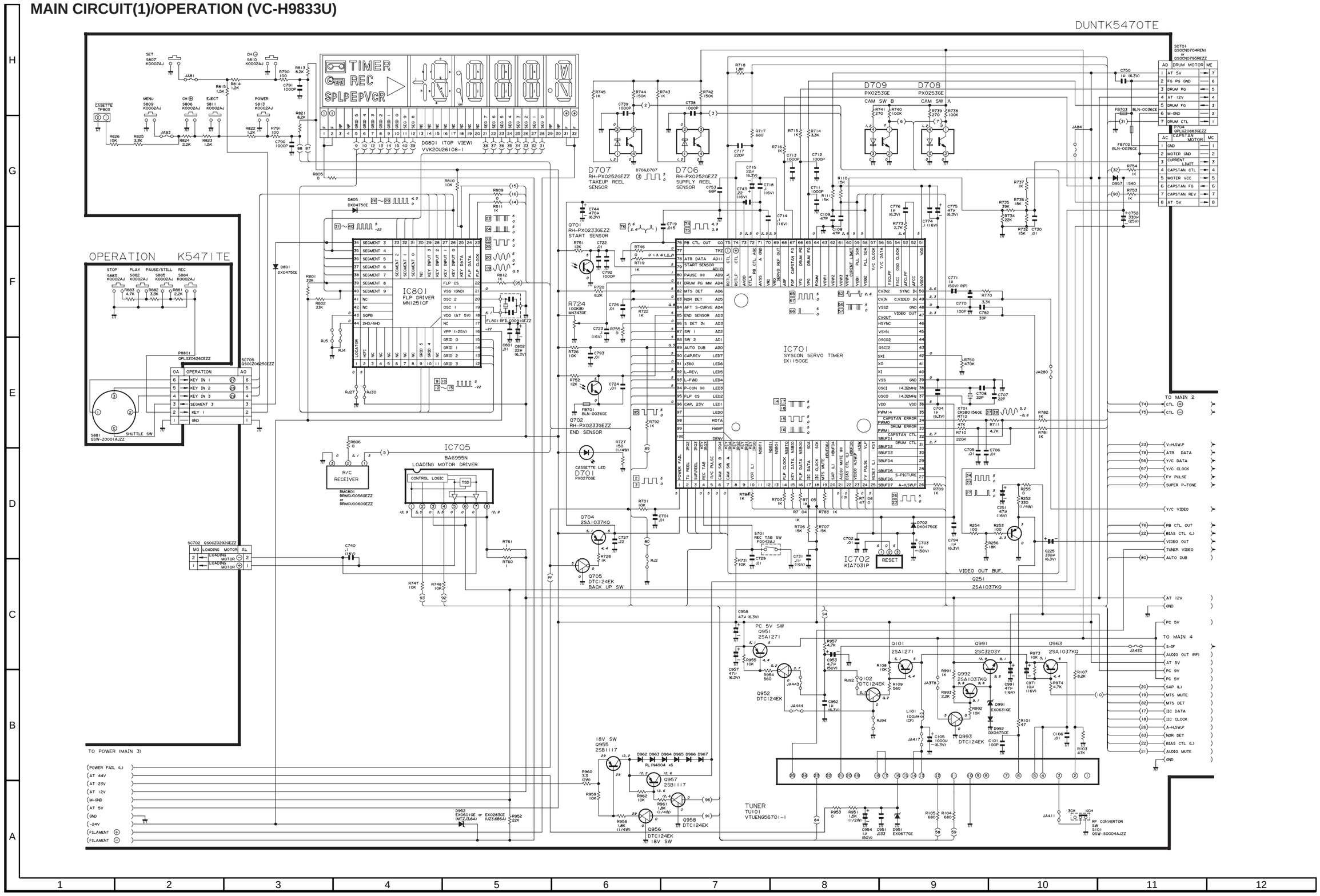

1	2	3	4	5	6	7	8	9	10	11	12

*** VOLTAGE MEASUREMENT MODE**
PB ..... Parentheses ( )
REC ..... Without Parentheses

MAIN CIRCUIT(2) (VC-A382U)

DUNTK5470TE

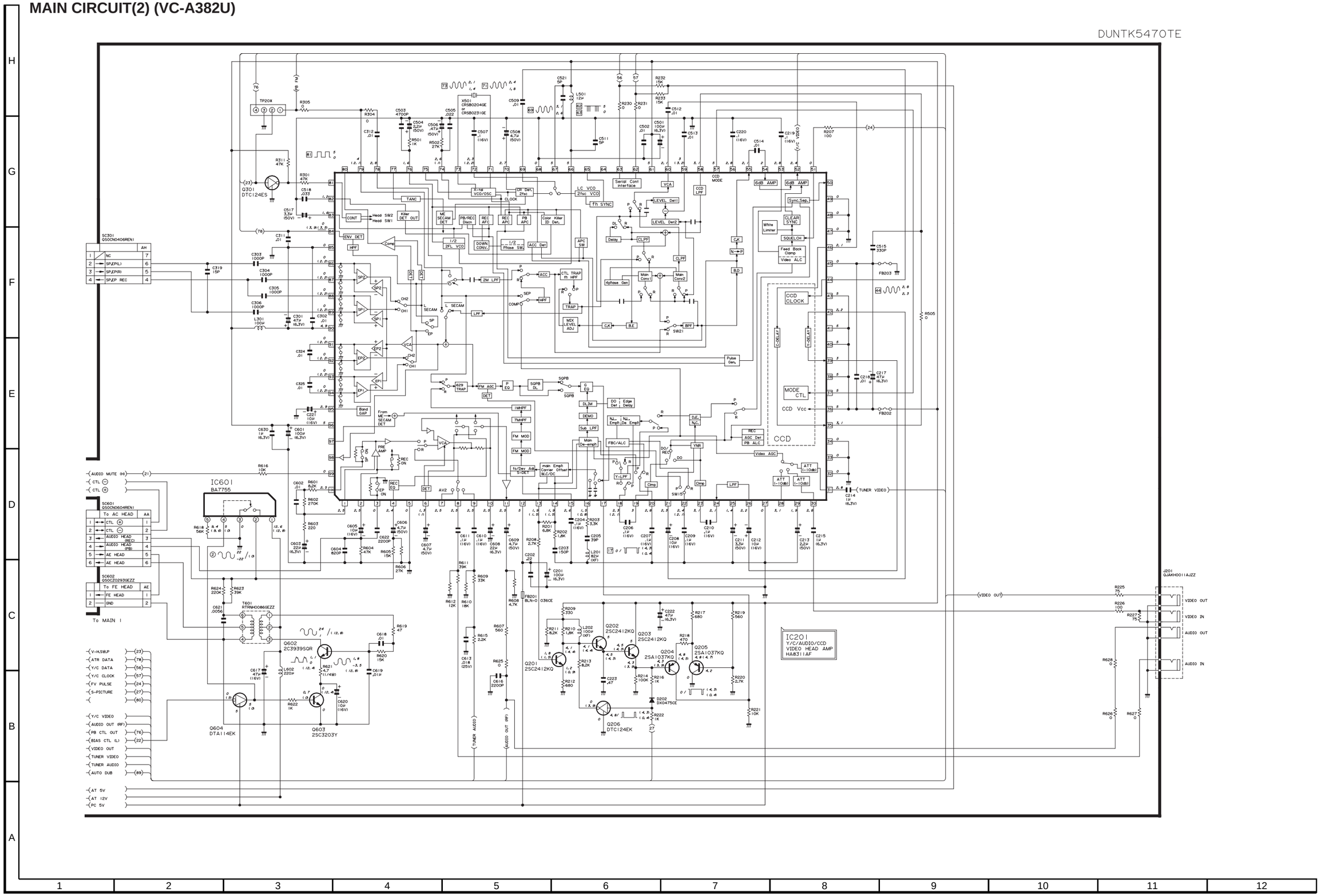

* VOLTAGE MEASUREMENT MODE
PB ..... Parentheses ( )
REC ..... Without Parentheses

VC-A382U VC-A582U
VC-A5833U VC-H982U
VC-H9833U VC-H983U

MAIN CIRCUIT(2) (VC-A582U)

DUNTK5470TE

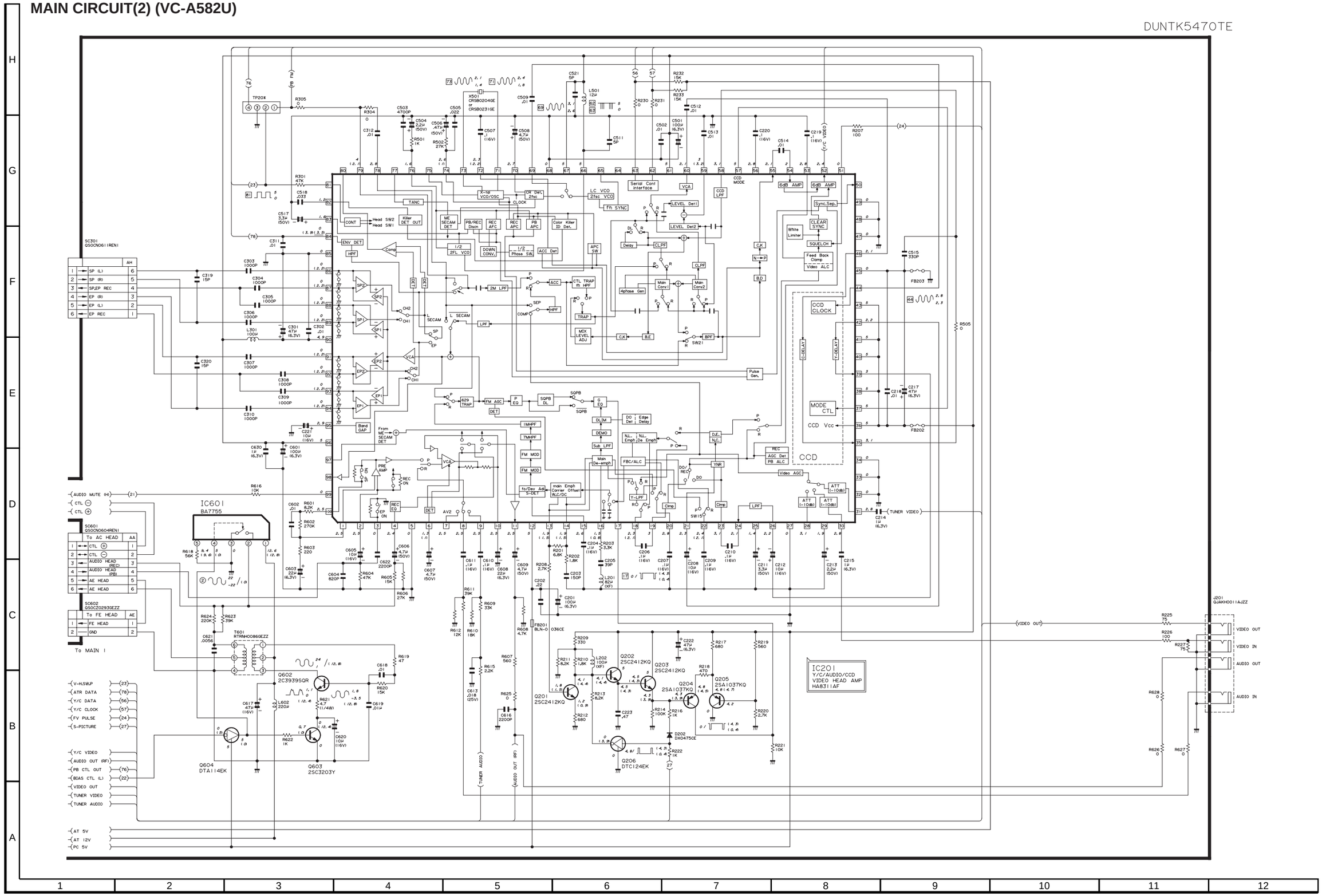

1	2	3	4	5	6	7	8	9	10	11	12

*** VOLTAGE MEASUREMENT MODE**
PB ..... Parentheses ( )
REC ..... Without Parentheses

MAIN CIRCUIT(2) (VC-A5833U)

DUNTK5470TE

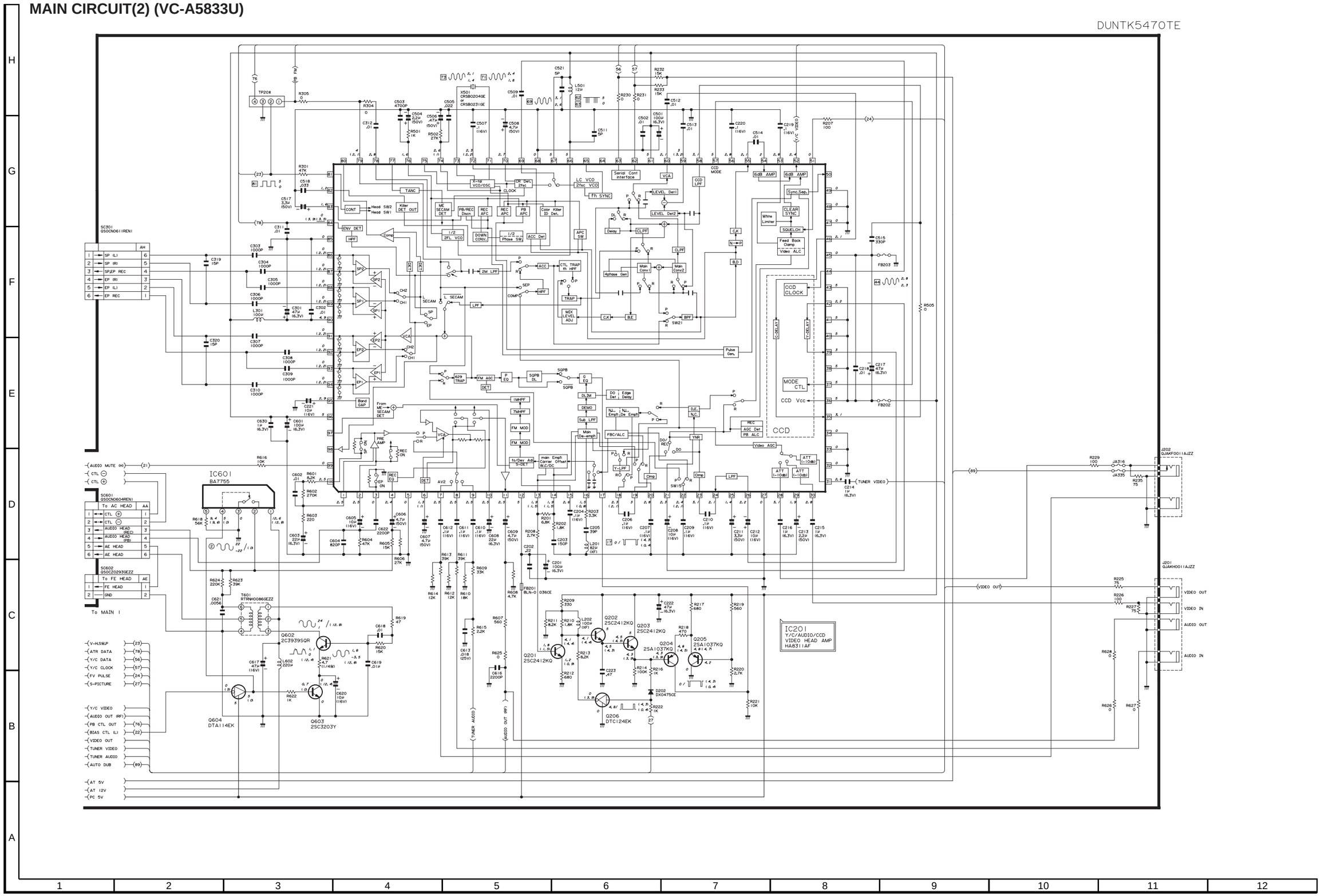

*** VOLTAGE MEASUREMENT MODE**
PB ..... Parentheses ( )
REC ..... Without Parentheses

VC-A382U VC-A582U
VC-A5833U VC-H982U
VC-H9833U VC-H983U

MAIN CIRCUIT(2) (VC-H982U/H983U)

DUNTK5470TE

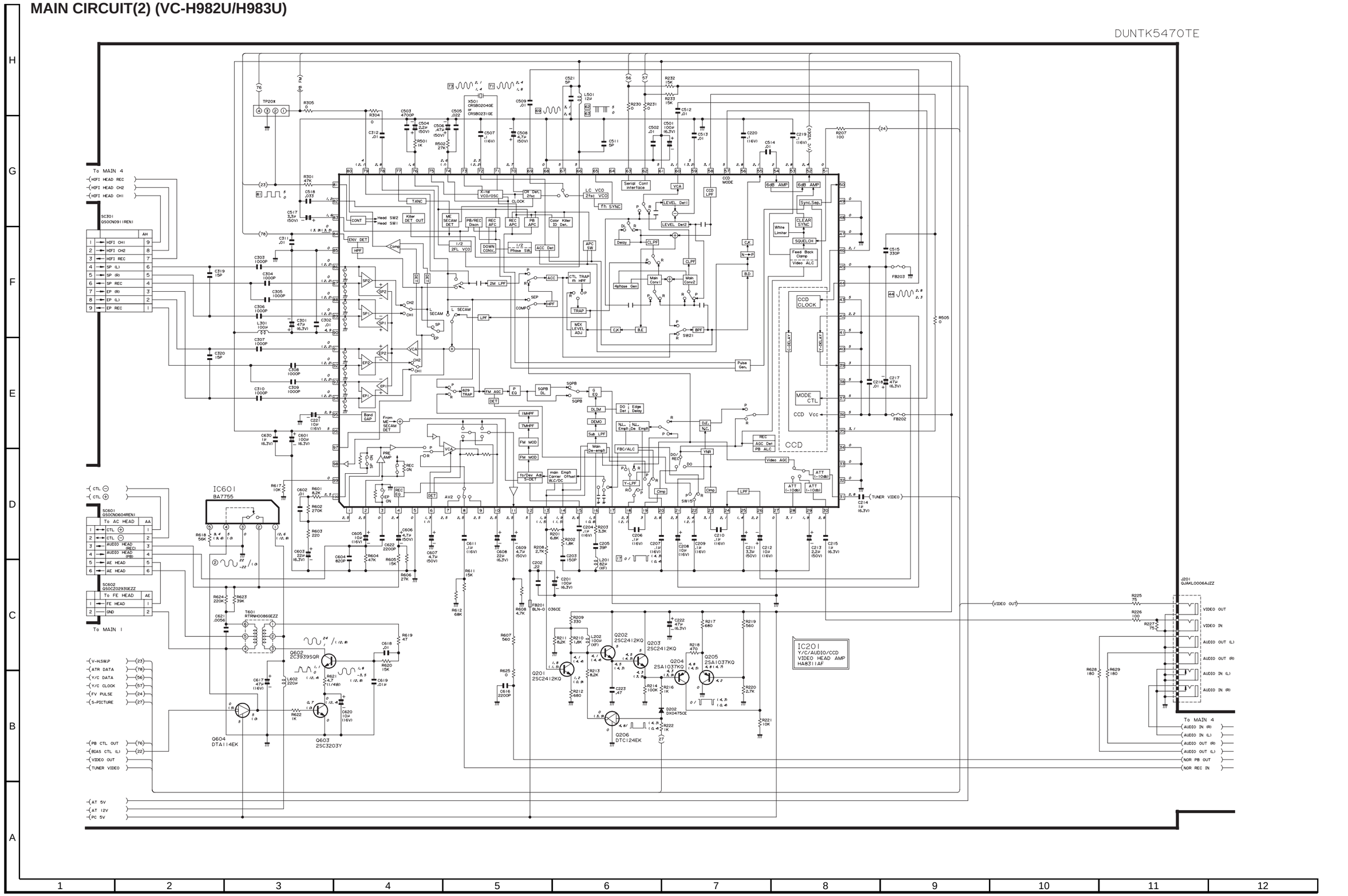

*** VOLTAGE MEASUREMENT MODE**
PB ..... Parentheses ( )
REC ..... Without Parentheses

MAIN CIRCUIT(2) (VC-H9833U)

DUNTK5470TE

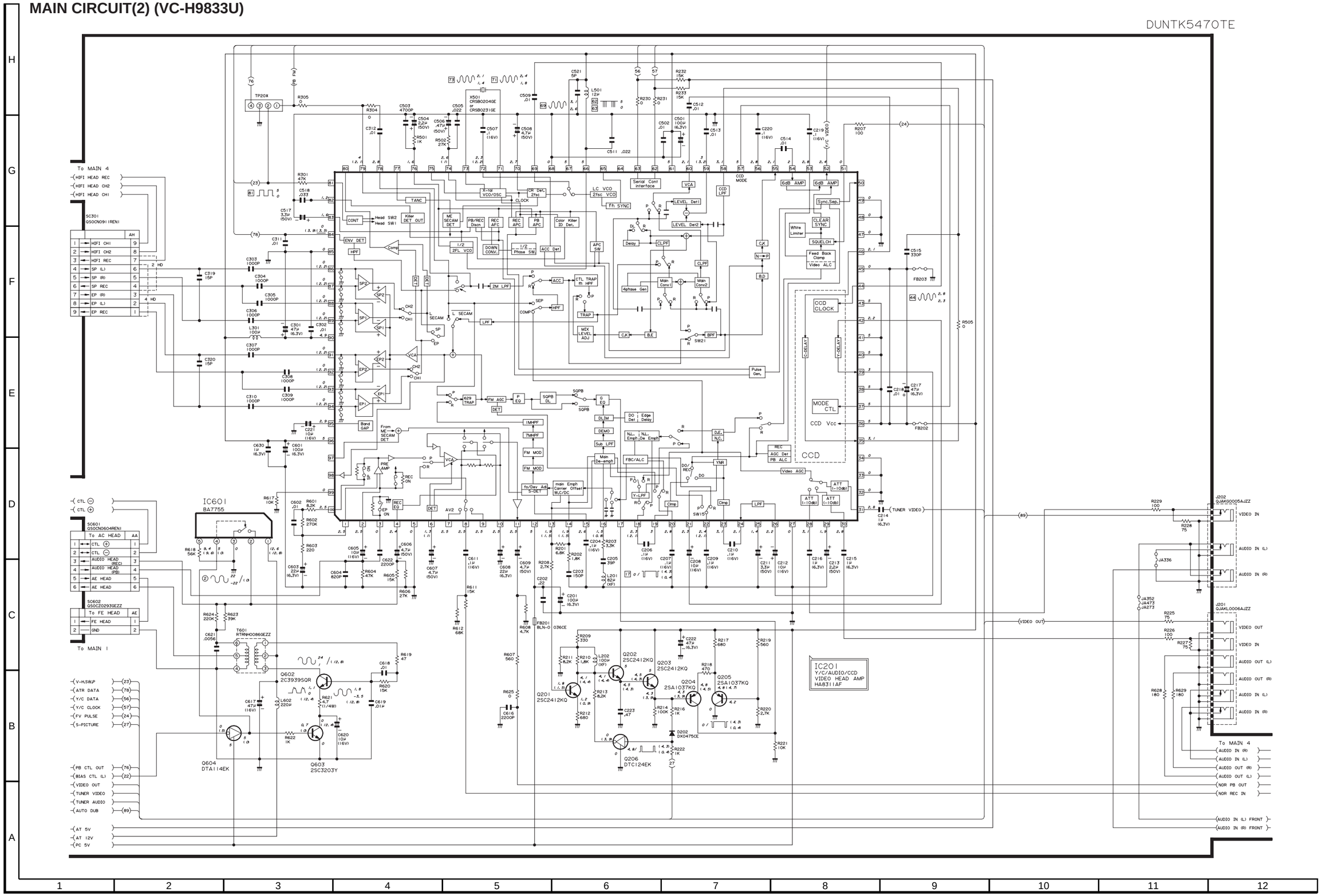

* VOLTAGE MEASUREMENT MODE
PB ..... Parentheses ( )
REC ..... Without Parentheses

MAIN CIRCUIT(3)

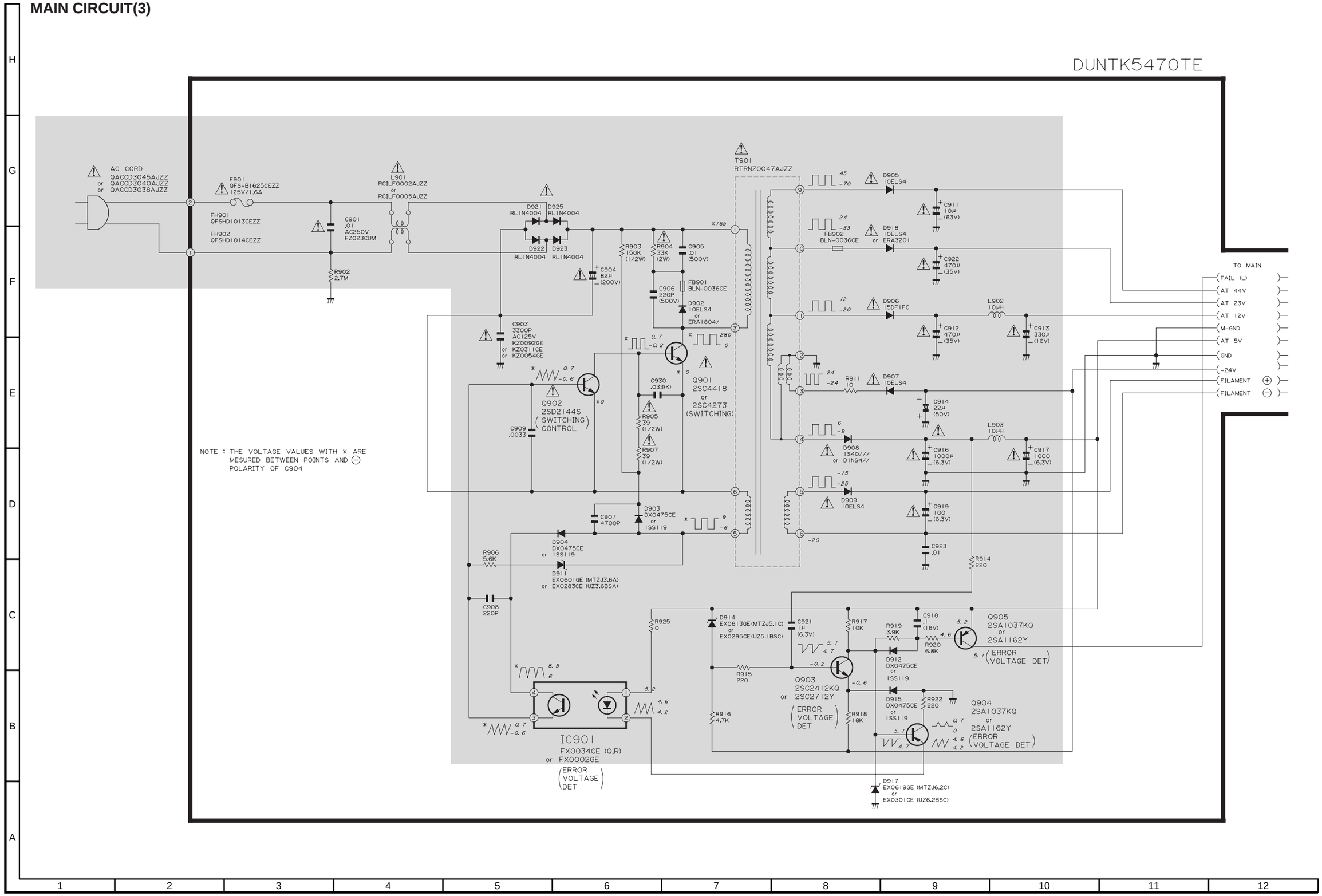

*** VOLTAGE MEASUREMENT MODE**
PB ..... Parentheses ( )
REC ..... Without Parentheses

MAIN CIRCUIT(4) (VC-H982U/H983U/H9833U)

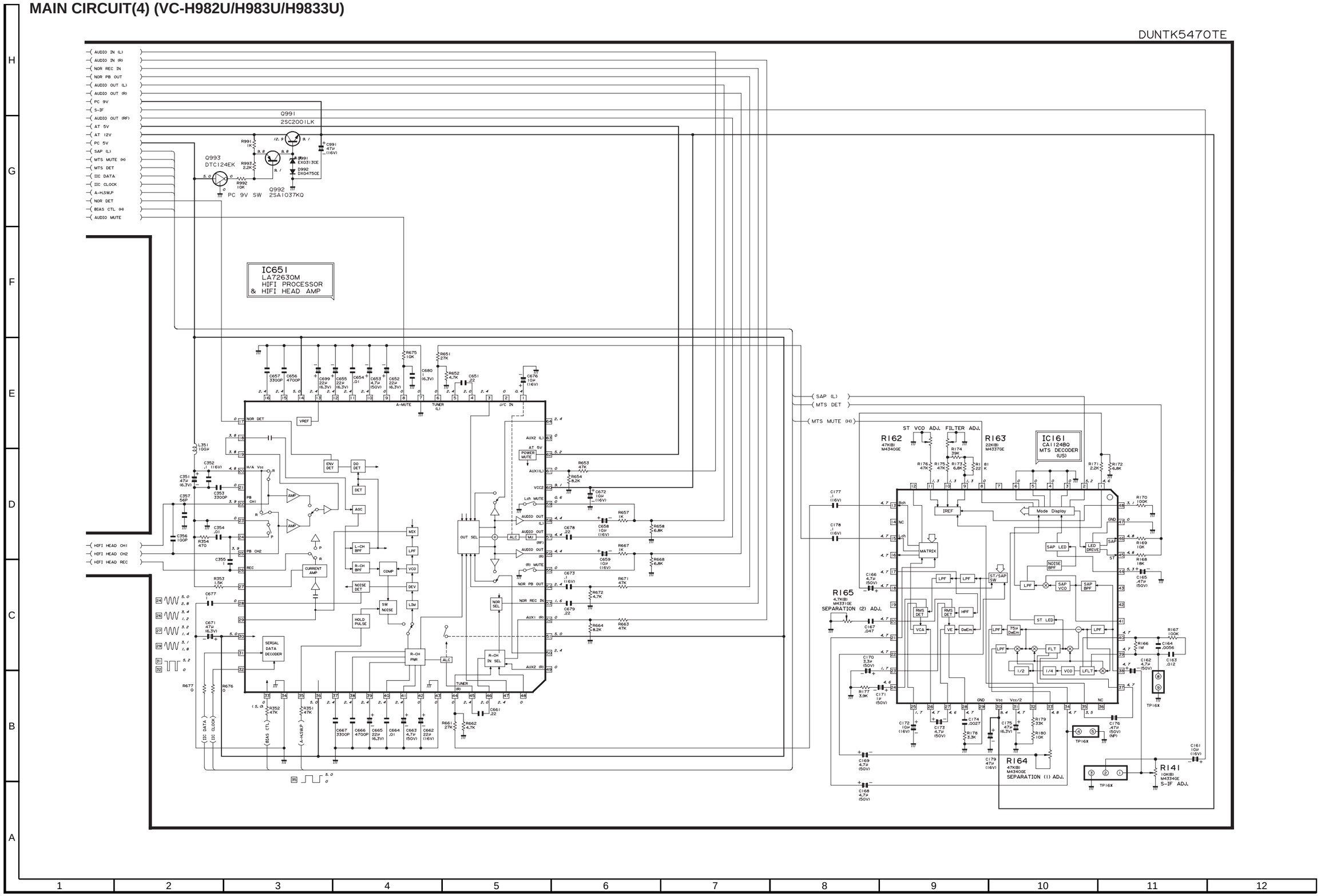

1	2	3	4	5	6	7	8	9	10	11	12

*** VOLTAGE MEASUREMENT MODE**
PB ..... Parentheses ( )
REC ..... Without Parentheses

VC-A382U VC-A582U
VC-A5833U VC-H982U
VC-H9833U VC-H983U

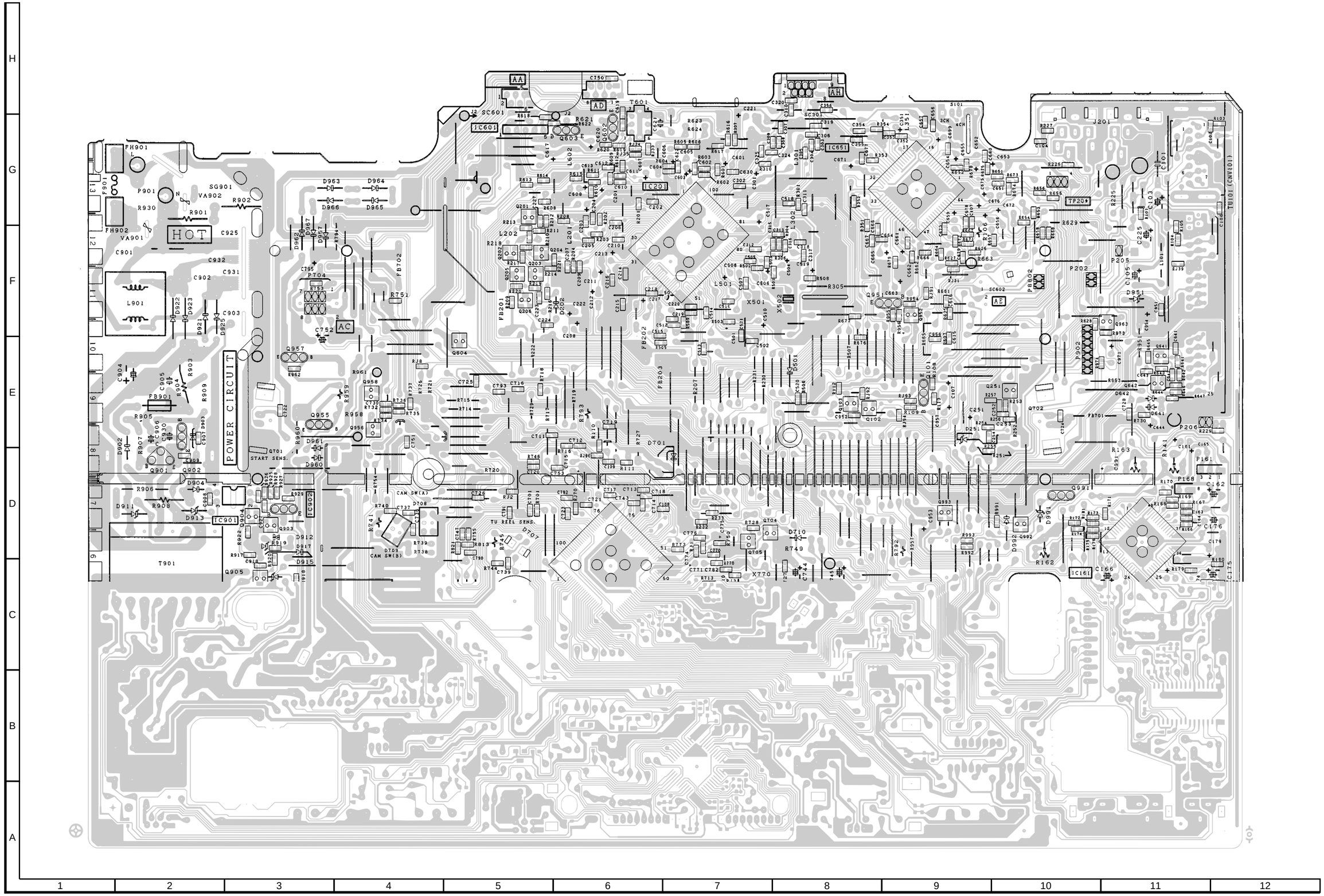

10. PARTS LIST
PARTS REPLACEMENT

Parts marked with " ⚠ " are important for maintaining the safety of the set. Be sure to replace these parts with specified ones for maintaining the safety and performance of the set.

"HOW TO ORDER REPLACEMENT PARTS"

To have your order filled promptly and correctly, please furnish the following informations.

1. MODEL NUMBER **2. REF. NO.**
3. PART NO. **4. DESCRIPTION**

In **USA**: Contact your nearest SHARP Parts Distributor to order. For location of SHARP Parts Distributor, Please Call Toll-free; 1-800-BE-SHARP

LISTE DES PIECES
CHANGE DES PIECES

Les pièces marquées " ⚠ " sont importantes pour maintenir la sécurité de l'appareil. Ne remplacer ces pièces que par des pièces dont le numéro est spécifié pour maintenir la sécurité et protéger le bon fonctinnement de l'appareil.

"COMMENT COMMANDER LES PIECES DE RECHANGE"

Pour que votre commande soit rapidement et correctement remplie, veuillez fournir les renseignements suivants.

1. NUMERO DU MODELE **2. NO. DE REF**
3. NO. DE PIECE **4. DESCRIPTION**

In **CANADA**: Contact Sharp Electronics of Canada Limited
Phone (416) 890-2100

HOW TO IDENTIFY CHIP TRANSISTORS AND DIODES BY ITS MARKING

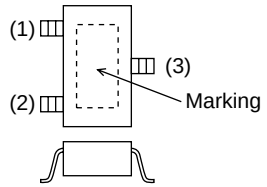

Fig. 1

(1) Base/Input
(2) Emitter/Ground
(3) Collector/Output

Package	Marking	Parts No.
Fig. 1	FQ	VS2SA1037KQ-1
Fig. 1	BQ	VS2SC2412KQ-1
Fig. 1	16	VSDTA144EK/-1
Fig. 1	15	VSDTA124EK/-1
Fig. 1	25	VSDTC124EK/-1

MARK ★: SPARE PARTS-DELIVERY SECTION

Ref. No.	Part No.	★	Description	Code

PRINTED WIRING BOARD ASSEMBLIES
(NOT REPLACEMENT ITEM)

DUNTK5470TEV2	-	Main Unit(VC-H982U/H983U)	—
DUNTK5470TEV3	-	Main Unit(VC-A582U)	—
DUNTK5470TEVE	-	Main Unit(VC-A382U)	—
DUNTK5470TEVF	-	Main Unit(VC-A5833U)	—
DUNTK5470TEVH	-	Main Unit(VC-H9833U)	—
DUNTK5471TEV0	-	Operation Unit (Except VC-A5833U)	—
DUNTK5531TEV0	-	Operation Unit(VC-A5833U)	—

DUNTK5470TEV2(VC-H982U/H983U)
DUNTK5470TEV3(VC-A582U)
DUNTK5470TEVE(VC-A382U)
DUNTK5470TEVF(VC-A5833U)
DUNTK5470TEVH(VC-H9833U)
MAIN Unit

TUNER

NOTE: THE PARTS HERES SHOWN ARE SUPPLIED AS AN ASSEMBLY NOT INDEPENDENTLY.

TU101	VTUENG56701-1	V	Tuner	BL

INTEGRATED CIRCUITS

IC161	VHiCA1124BQ-1	V	MTS Decoder (Except VC-A382U/A5833U)	AY
IC201	VHiHA8311AF-1	V	Y/C/Audio/CCD/Video Head AMP	AY
IC601	VHiBA7755//-1	V	REC/PB SW	AD
IC651	VHiLA72631M-1	V	Hi Fi Processor (Except VC-A382U/A582U/ A5833U)	AU
IC701	RH-iX1150GEZZ	V	SYSCON SERVO Timer	AX
IC702	VHiKiA7031P-1	V	Reset	AD
IC705	VHiBA6955N/-1	V	Loading Motor Driver	AF
IC801	VHiMN12510F-1	V	FLP Driver	AM
⚠ IC901	RH-FX0034CEZZ	V	Photo Coupler	AE

TRANSISTORS

Q101	VS2SA1271-Y-1	V	Transistor	AB
Q102	VSDTC124EK/-1	V	Transistor	AB
Q201	VS2SC2412KQ-1	V	Transistor	AA
Q202	VS2SC2412KQ-1	V	Transistor	AA
Q203	VS2SC2412KQ-1	V	Transistor	AA
Q204	VS2SA1037KQ-1	V	Transistor	AA
Q205	VS2SA1037KQ-1	V	Transistor	AA
Q206	VSDTC124EK/-1	V	Transistor	AB
Q251	VS2SA1037KQ-1	V	Transistor	AA

DUNTK5470TE
MAIN Unit(Continued)

Ref. No.	Part No.	★	Description	Code
Q301	VSDTC124ES/-1	V	Transistor	AB
Q602	VS2C3939SQR-1	V	Transistor	AC
Q603	VS2SC3203Y/-1	V	Transistor	AB
Q604	VSDTA114EK/-1	V	Transistor	AB
Q701	RH-PX0233GEZZ	V	Start Sensor	AD
Q702	RH-PX0233GEZZ	V	End Sensor	AD
Q704	VS2SA1037KQ-1	V	Transistor	AA
Q705	VSDTC124EK/-1	V	Transistor	AB
⚠ Q901	VS2SC4418//-1	V	Transistor	AH
⚠ Q902	VS2SD2144S/-1	V	Transistor	AC
⚠ Q903	VS2SC2412KQ-1	V	Transistor	AA
⚠ Q904	VS2SA1037KQ-1	V	Transistor	AA
⚠ Q905	VS2SA1037KQ-1	V	Transistor	AA
Q951	VS2SA1271-Y-1	V	Transistor	AB
Q952	VSDTC124EK/-1	V	Transistor	AB
Q955	VS2SB1117KU1E	V	Transistor	AE
Q956	VSDTC124EK/-1	V	Transistor	AB
Q957	VS2SB1117KU1E	V	Transistor	AE
Q958	VSDTC124EK/-1	V	Transistor	AB
Q963	VS2SA1037KQ-1	V	Transistor	AA
Q991	VS2SC3203Y/-1	V	Transistor	AB
Q992	VS2SA1037KQ-1	V	Transistor	AA
Q993	VSDTC124EK/-1	V	Transistor	AB
DIODES AND LED'S				
DG801	VVK20U26108-1	V	Display	AW
D202	RH-DX0475CEZZ	V	Diode	AB
D701	RH-PX0270GEZZ	V	Cassette LED	AC
D702	RH-DX0475CEZZ	V	Diode	AB
D706	RH-PX0252GEZZ	V	Supply Reel Sensor	AF
D707	RH-PX0252GEZZ	V	Take-up Reel Sensor	AF
D708	RH-PX0253GEZZ	V	CAM SW A	AF
D709	RH-PX0253GEZZ	V	CAM SW B	AF
D801	RH-DX0475CEZZ	V	Diode	AB
D805	RH-DX0475CEZZ	V	Diode (VC-A5833U/H9833U)	AB
⚠ D902	VHD10ELS4//-1	V	Diode	AD
⚠ D903	RH-DX0475CEZZ	V	Diode	AB
⚠ D904	RH-DX0475CEZZ	V	Diode	AB
⚠ D905	VHD10ELS4//-1	V	Diode	AD
⚠ D906	VHD15DF1FC/1E	V	Diode	AD
⚠ D907	VHD10ELS4//-1	V	Diode	AD
⚠ D908	VHD1S40////-1	V	Diode	AF
⚠ D909	VHD10ELS4//-1	V	Diode	AD
⚠ D911	RH-EX0601GEZZ	V	Zener Diode	AA
⚠ D912	RH-DX0475CEZZ	V	Diode	AB
⚠ D914	RH-EX0613GEZZ	V	Zener Diode	AA
⚠ D915	RH-DX0475CEZZ	V	Diode	AB
D917	RH-EX0619GEZZ	V	Zener Diode	AA
⚠ D918	VHD10ELS4//-1	V	Diode	AD
⚠ D921	VHDRL1N4004-1	V	Diode	AD
⚠ D922	VHDRL1N4004-1	V	Diode	AD
⚠ D923	VHDRL1N4004-1	V	Diode	AD
⚠ D925	VHDRL1N4004-1	V	Diode	AD
D951	RH-EX0677GEZZ	V	Zener Diode	AB
D952	RH-EX0601GEZZ	V	Zener Diode	AA
D957	VHD1S40////-1	V	Diode	AF
D962	VHDRL1N4004-1	V	Diode	AD
D963	VHDRL1N4004-1	V	Diode	AD
D964	VHDRL1N4004-1	V	Diode	AD
D965	VHDRL1N4004-1	V	Diode	AD
D966	VHDRL1N4004-1	V	Diode	AD
D967	VHDRL1N4004-1	V	Diode	AD
D991	RH-EX0631GEZZ	V	Zener Diode	AA
D992	RH-DX0475CEZZ	V	Diode	AB
PACKAGED CIRCUITS				
X501	RCRSB0204GEZZ	V	Crystal	AG
X701	RCRSB0156GEZZ	V	Crystal	AF
FILTES				
FL801	RFiLC0091GEZZ	V	Filter	AD
COILS				
L101	VP-CF101K0000	V	Peaking 100µH	AB
L201	VP-XF820K0000	V	Peaking 82µH	AB
L202	VP-XF101K0000	V	Peaking 100µH	AB
L301	VP-ZK101K0000	V	Peaking 100µH	AB
L351	VP-ZK101K0000	V	Peaking 100µH (Except VC-A382U/A582U/A5833U)	AB
L501	VP-XF120K0000	V	Peaking 12µH	AB
L602	VP-DF221K0000	V	Peaking 220µH	AB
⚠ L901	RCiLF0002AJZZ	V	Coil	AK
⚠ L902	RCiLP0161CEZZ	V	Coil, 10µH	AD
⚠ L903	RCiLP0161CEZZ	V	Coil, 10µH	AD
TRANSFORMERS				
T601	RTRNH0086GEZZ	V	Oscillation Transformer	AD
⚠ T901	RTRNZ0047AJZZ	V	Transformer	AV
VARIABLE RESISTORS				
R141	RVR-M4340GEZZ	V	10k(B), S-IF ADJ. (Except VC-A382U/A582U/A5833U)	AB
R162	RVR-M4340GEZZ	V	47k(B), ST VCO ADJ. (Except VC-A382U/A582U/A5833U)	AB
R163	RVR-M4337GEZZ	V	22k(B), Filter ADJ. (Except VC-A382U/A582U/A5833U)	AB
R164	RVR-M4340GEZZ	V	47k(B), Separation(1) ADJ. (Except VC-A382U/A582U/A5833U)	AB
R165	RVR-M4331GEZZ	V	4.7k(B), Separation(2) ADJ. (Except VC-A382U/A582U/A5833U)	AC
R724	RVR-M4343GEZZ	V	100k(B), Head Switching Point ADJ.	AB

DUNTK5470TE
MAIN Unit(Continued)

CAPACITORS

Ref. No.	Part No.	★	Description	Code
C101	VCKYD41HB101K	V	100p 50V Ceramic	AA
C105	VCEAGA0JW108M	V	1000 6.3V Electrolytic	AC
C106	VCKYCY1HF103Z	V	0.01 50V Ceramic	AA
C108	VCCCCY1HH470J	V	47p 50V Ceramic	AA
C109	VCCCCY1HH470J	V	47p 50V Ceramic	AA
C161	VCEA9M1CW106M	V	10 16V Electrolytic (Except VC-A382U/A582U/A5833U)	AB
C162	VCEA9A1HW475M	V	4.7 50V Electrolytic (Except VC-A382U/A582U/A5833U)	AB
C163	VCKYCY1EB123K	V	0.012 25V Ceramic (Except VC-A382U/A582U/A5833U)	AA
C164	VCKYCY1HB562K	V	5600p 50V Ceramic (Except VC-A382U/A582U/A5833U)	AA
C165	VCEA9M1HW474M	V	0.47 50V Electrolytic (Except VC-A382U/A582U/A5833U)	AB
C166	VCEA9A1HW475M	V	4.7 50V Electrolytic (Except VC-A382U/A582U/A5833U)	AB
C167	VCKYCY1CB473K	V	0.047 16V Ceramic (Except VC-A382U/A582U/A5833U)	AA
C168	VCEA9A1HW475M	V	4.7 50V Electrolytic (Except VC-A382U/A582U/A5833U)	AB
C169	VCEA9M1HW475M	V	4.7 50V Electrolytic (Except VC-A382U/A582U/A5833U)	AB
C170	VCEA9M1HW335M	V	3.3 50V Electrolytic (Except VC-A382U/A582U/A5833U)	AB
C171	VCEA9M1HW105M	V	1 50V Electrolytic (Except VC-A382U/A582U/A5833U)	AB
C172	VCEA9M1CW106M	V	10 16V Electrolytic (Except VC-A382U/A582U/A5833U)	AB
C173	VCEA9M1HW475M	V	4.7 50V Electrolytic (Except VC-A382U/A582U/A5833U)	AB
C174	VCKYCY1HB272K	V	2700p 50V Ceramic (Except VC-A382U/A582U/A5833U)	AA
C175	VCEA9A0JW476M	V	47 6.3V Electrolytic (Except VC-A382U/A582U/A5833U)	AB
C176	VCE9EA1HW474M	V	0.47 50V ELECT. (N.P) (Except VC-A382U/A582U/A5833U)	AB
C177	VCKYCY1CF104Z	V	0.1 16V Ceramic (Except VC-A382U/A582U/A5833U)	AA
C178	VCKYCY1CF104Z	V	0.1 16V Ceramic (Except VC-A382U/A582U/A5833U)	AA
C179	VCEA9M1CW476M	V	47 16V Electrolytic (Except VC-A382U/A582U/A5833U)	AB
C201	VCEA9M0JW107M	V	100 6.3V Electrolytic	AB
C202	VCKYCY1CF224Z	V	0.22 16V Ceramic	AA
C203	VCCCCY1HH151J	V	150p 50V Ceramic	AA
C204	VCKYCY1CF104Z	V	0.1 16V Ceramic	AA
C205	VCCCCY1HH390J	V	39p 50V Ceramic	AA
C206	VCKYCY1CF104Z	V	0.1 16V Ceramic	AA
C207	VCKYCY1CF104Z	V	0.1 16V Ceramic	AA
C208	VCEA9M1CW106M	V	10 16V Electrolytic	AB
C209	VCKYCY1CF104Z	V	0.1 16V Ceramic	AA
C210	VCKYCY1CF104Z	V	0.1 16V Ceramic	AA
C211	VCEA9M1HW335M	V	3.3 50V Electrolytic	AB
C212	VCEA9M1CW106M	V	10 16V Electrolytic	AB
C213	VCEA9M1HW225M	V	2.2 50V Electrolytic	AB
C214	VCKYCY0JF105Z	V	1 6.3V Ceramic	AB
C215	VCKYCY0JF105Z	V	1 6.3V Ceramic	AB
C216	VCKYCY0JF105Z	V	1 6.3V Ceramic (VC-A5833U/H9833U)	AB
C217	VCEA9M0JW476M	V	47 6.3V Electrolytic	AB
C218	VCKYCY1HF103Z	V	0.01 50V Ceramic	AA
C219	VCKYCY1CF104Z	V	0.1 16V Ceramic	AA
C220	VCKYCY1CF104Z	V	0.1 16V Ceramic	AA
C221	VCEA9M1CW106M	V	10 16V Electrolytic	AB
C222	VCEA9M0JW476M	V	47 6.3V Electrolytic	AB
C223	VCKYCY1CF474Z	V	0.47 16V Ceramic	AB
C225	VCEAGA0JW337M	V	330 6.3V Electrolytic	AB
C251	VCEA9M1CW476M	V	47 16V Electrolytic	AB
C301	VCEA9M0JW476M	V	47 6.3V Electrolytic	AB
C302	VCKYCY1HF103Z	V	0.01 50V Ceramic	AA
C303	VCKYCY1HB102K	V	1000p 50V Ceramic	AA
C304	VCKYCY1HB102K	V	1000p 50V Ceramic	AA
C305	VCKYCY1HB102K	V	1000p 50V Ceramic	AA
C306	VCKYCY1HB102K	V	1000p 50V Ceramic	AA
C307	VCKYCY1HB102K	V	1000p 50V Ceramic (Except VC-A382U)	AA
C308	VCKYCY1HB102K	V	1000p 50V Ceramic (Except VC-A382U)	AA
C309	VCKYCY1HB102K	V	1000p 50V Ceramic (Except VC-A382U)	AA
C310	VCKYCY1HB102K	V	1000p 50V Ceramic (Except VC-A382U)	AA
C311	VCKYCY1EB103K	V	0.01 25V Ceramic	AA
C312	VCKYCY1HF103Z	V	0.01 50V Ceramic	AA
C319	VCCCCY1HH150J	V	15p 50V Ceramic	AA
C320	VCCCCY1HH150J	V	15p 50V Ceramic	AA
C324	VCKYCY1HF103Z	V	0.01 50V Ceramic (VC-A382U)	AA

DUNTK5470TE
MAIN Unit(Continued)

Ref. No.	Part No.	★	Description	Code
C325	VCKYCY1HF103Z	V	0.01 50V Ceramic (VC-A382U)	AA
C351	VCEA9M0JW476M	V	47 6.3V Electrolytic (Except VC-A382U/A582U/A5833U)	AB
C352	VCKYCY1CF104Z	V	0.1 16V Ceramic (Except VC-A382U/A582U/A5833U)	AA
C353	VCKYCY1HB332K	V	3300p 50V Ceramic (Except VC-A382U/A582U/A5833U)	AA
C354	VCKYCY1HF103Z	V	0.01 50V Ceramic (Except VC-A382U/A582U/A5833U)	AA
C355	VCKYCY0JF105Z	V	1 6.3V Ceramic (Except VC-A582U/A5833U)	AB
C356	VCCCCY1HH101J	V	100p 50V Ceramic (Except VC-A382U/A582U/A5833U)	AA
C357	VCCCPA1HH560J	V	56p 50V Ceramic (Except VC-A382U/A582U/A5833U)	AA
C501	VCEA9M0JW107M	V	100 6.3V Electrolytic	AB
C502	VCKYCY1HF103Z	V	0.01 50V Ceramic	AA
C503	VCKYCY1HB472K	V	4700p 50V Ceramic	AA
C504	VCEA9M1HW225M	V	2.2 50V Electrolytic	AB
C505	VCKYCY1HF223Z	V	0.022 50V Ceramic	AB
C506	VCEA9M1HW474M	V	0.47 50V Electrolytic	AB
C507	VCKYCY1CF104Z	V	0.1 16V Ceramic	AA
C508	VCEA9M1HW475M	V	4.7 50V Electrolytic	AB
C509	VCKYCY1HF103Z	V	0.01 50V Ceramic	AA
C511	VCCCCY1HH5R0C	V	5p 50V Ceramic	AA
C512	VCKYCY1HF103Z	V	0.01 50V Ceramic	AA
C513	VCKYCY1HF103Z	V	0.01 50V Ceramic	AA
C514	VCKYCY1HF103Z	V	0.01 50V Ceramic	AA
C515	VCKYCY1HB331K	V	330p 50V Ceramic	AA
C517	VCEA9M1HW335M	V	3.3 50V Electrolytic	AB
C518	VCKYCY1HF333Z	V	0.033 50V Ceramic	AA
C521	VCCCCY1HH5R0C	V	5p 50V Ceramic	AA
C601	VCEA9M0JW107M	V	100 6.3V Electrolytic	AB
C602	VCKYCY1EB103K	V	0.01 25V Ceramic	AA
C603	VCEA9A0JW226M	V	22 6.3V Electrolytic	AB
C604	VCKYCY1HB821K	V	820p 50V Ceramic	AA
C605	VCEA9M1CW106M	V	10 16V Electrolytic	AB
C606	VCEA9M1HW475M	V	4.7 50V Electrolytic	AB
C607	VCEA9M1HW475M	V	4.7 50V Electrolytic	AB
C608	VCEA9M0JW226M	V	22 6.3V Electrolytic	AB
C609	VCEA9M1HW475M	V	4.7 50V Electrolytic	AB
C610	VCKYCY1CF104Z	V	0.1 16V Ceramic (VC-A382U/A582U/A5833U)	AA
C611	VCKYCY1CF104Z	V	0.1 16V Ceramic	AA
C612	VCKYCY1CF104Z	V	0.1 16V Ceramic (VC-A5833U)	AA
C613	VCKYCY1EB183K	V	0.018 25V Ceramic (VC-A382U/A582U/A5833U)	AA
C616	VCKYCY1HB222K	V	2200p 50V Ceramic	AA
C617	VCEA9M1CW476M	V	47 16V Electrolytic	AB
C618	VCKYCY1EB103K	V	0.01 25V Ceramic	AA
C619	VCKYCY1EB103K	V	0.01 25V Ceramic	AA
C620	VCEA9M1CW106M	V	10 16V Electrolytic	AB
C621	VCQPYA2AA562J	V	5600p 100V	AC
C622	VCKYCY1HB222K	V	2200p 50V Ceramic	AA
C630	VCKYCY0JF105Z	V	1 6.3V Ceramic	AB
C651	VCKYCY1CF224Z	V	0.22 16V Ceramic (Except VC-A382U/A582U/A5833U)	AA
C652	VCEA9M0JW226M	V	22 6.3V Electrolytic (Except VC-A382U/A582U/A5833U)	AB
C653	VCEA9M1HW475M	V	4.7 50V Electrolytic (Except VC-A382U/A582U/A5833U)	AB
C654	VCKYCY1EB103K	V	0.01 25V Ceramic (Except VC-A382U/A582U/A5833U)	AA
C655	VCEA9M0JW226M	V	22 6.3V Electrolytic (Except VC-A382U/A582U/A5833U)	AB
C656	VCKYCY1HB472K	V	4700p 50V Ceramic (Except VC-A382U/A582U/A5833U)	AA
C657	VCKYCY1HB332K	V	3300p 50V Ceramic (Except VC-A382U/A582U/A5833U)	AA
C658	VCEA9M1CW106M	V	10 16V Electrolytic (Except VC-A382U/A582U/A5833U)	AB
C659	VCEA9M1CW106M	V	10 16V Electrolytic (Except VC-A382U/A582U/A5833U)	AB
C661	VCKYCY1CF224Z	V	0.22 16V Ceramic (Except VC-A382U/A582U/A5833U)	AA
C662	VCEA9M0JW226M	V	22 6.3V Electrolytic (Except VC-A382U/A582U/A5833U)	AB
C663	VCEA9M1HW475M	V	4.7 50V Electrolytic (Except VC-A382U/A582U/A5833U)	AB
C664	VCKYCY1EB103K	V	0.01 25V Ceramic (Except VC-A382U/A582U/A5833U)	AA
C665	VCEA9M0JW226M	V	22 6.3V Electrolytic (Except VC-A382U/A582U/A5833U)	AB
C666	VCKYCY1HB472K	V	4700p 50V Ceramic (Except VC-A382U/A582U/A5833U)	AA

DUNTK5470TE
MAIN Unit(Continued)

Ref. No.	Part No.	★	Description	Code
C667	VCKYCY1HB332K	V	3300p 50V Ceramic (Except VC-A382U/A582U/A5833U)	AA
C671	VCEA9M0JW476M	V	47 6.3V Electrolytic (Except VC-A382U/A582U/A5833U)	AB
C672	VCEA9M1CW106M	V	10 16V Electrolytic (Except VC-A382U/A582U/A5833U)	AB
C673	VCKYCY1CF104Z	V	0.1 16V Ceramic (Except VC-A382U/A582U/A5833U)	AA
C676	VCEA9M1CW106M	V	10 16V Electrolytic (Except VC-A382U/A582U/A5833U)	AB
C677	VCKYCY0JF105Z	V	1 6.3V Ceramic (Except VC-A382U/A582U/A5833U)	AB
C678	VCKYCY1CF224Z	V	0.22 16V Ceramic (Except VC-A382U/A582U/A5833U)	AA
C679	VCKYCY1CF224Z	V	0.22 16V Ceramic (Except VC-A382U/A582U/A5833U)	AA
C680	VCKYCY0JF105Z	V	1 6.3V Ceramic (Except VC-A382U/A582U/A5833U)	AB
C699	VCEA9M0JW226M	V	22 6.3V Electrolytic (Except VC-A382U/A582U/A5833U)	AB
C701	VCKYCY1HF103Z	V	0.01 50V Ceramic	AA
C702	VCKYCY1HF103Z	V	0.01 50V Ceramic	AA
C703	VCEA9M1HW105M	V	1 50V Electrolytic	AB
C704	VCKYCY0JF105Z	V	1 6.3V Ceramic	AB
C705	VCKYCY1EB103K	V	0.01 25V Ceramic	AA
C706	VCKYCY1EB103K	V	0.01 25V Ceramic	AA
C707	VCCCCY1HH220J	V	22p 50V Ceramic	AA
C708	VCCCCY1HH220J	V	22p 50V Ceramic	AA
C711	VCKYCY1HB102K	V	1000p 50V Ceramic	AA
C712	VCKYCY1HB102K	V	1000p 50V Ceramic	AA
C713	VCKYCY1HB102K	V	1000p 50V Ceramic	AA
C714	VCKYCY1CF104Z	V	0.1 16V Ceramic	AA
C715	VCEA9M0JW226M	V	22 6.3V Electrolytic	AB
C717	VCKYCY1HB221K	V	220p 50V Ceramic	AA
C718	VCKYCY1CF104Z	V	0.1 16V Ceramic	AA
C719	VCKYCY1EB153K	V	0.015 25V Ceramic	AA
C722	VCKYCY1HF103Z	V	0.01 50V Ceramic	AA
C723	VCKYCY1CF104Z	V	0.1 16V Ceramic	AA
C724	VCKYCY1HF103Z	V	0.01 50V Ceramic	AA
C726	VCKYCY1HF103Z	V	0.01 50V Ceramic (Except VC-A382U/A582U/A5833U)	AA
C727	VCKYCY1CF224Z	V	0.22 16V Ceramic	AA
C729	VCKYCY1HF103Z	V	0.01 50V Ceramic	AA
C730	VCKYCY1HF103Z	V	0.01 50V Ceramic	AA
C731	VCKYCY1CF104Z	V	0.1 16V Ceramic	AA
C738	VCKYCY1HB102K	V	1000p 50V Ceramic	AA
C739	VCKYCY1HB102K	V	1000p 50V Ceramic	AA
C740	VCKYCY1CF104Z	V	0.1 16V Ceramic	AA
C743	VCKYCY1CF224Z	V	0.22 16V Ceramic	AA
C744	VCEA2A0JW477M	V	470 6.3V Electrolytic	AB
C750	VCKYCY0JF105Z	V	1 6.3V Ceramic	AB
C752	VCEA2A1EW337M	V	330 25V Electrolytic	AD
C753	VCCCCY1HH680J	V	68p 50V Ceramic	AA
C770	VCCCCY1HH101J	V	100p 50V Ceramic	AA
C771	VCE9EM1HW105M	V	1 50V ELECT. (N.P)	AB
C774	VCKYCY1CF104Z	V	0.1 16V Ceramic	AA
C775	VCEA9M0JW476M	V	47 6.3V Electrolytic	AB
C776	VCKYCY0JF105Z	V	1 6.3V Ceramic	AB
C782	VCCCCY1HH330J	V	33p 50V Ceramic	AA
C790	VCKYCY1HB102K	V	1000p 50V Ceramic	AA
C791	VCKYCY1HB102K	V	1000p 50V Ceramic	AA
C792	VCKYCY1HB102K	V	1000p 50V Ceramic	AA
C793	VCKYCY1HF103Z	V	0.01 50V Ceramic (VC-A5833U/H9833U)	AA
C794	VCKYCY0JF105Z	V	1 6.3V Ceramic	AB
C801	VCKYCY1HF103Z	V	0.01 50V Ceramic	AA
C802	VCEA9M0JW226M	V	22 6.3V Electrolytic	AB
⚠ C901	RC-FZ023CUMZZ	V	0.01 AC250V	AF
⚠ C903	RC-KZ0092GEZZ	V	3300p AC125V Ceramic	AC
⚠ C904	RC-EZ0238CEZZ	V	82 200V Electrolytic	AE
⚠ C905	RC-KZ0029CEZZ	V	0.01 500v Ceramic	AC
⚠ C906	VCKYPA2HB221K	V	220p 500V Ceramic	AA
⚠ C907	VCKYCY1HB472K	V	4700p 50V Ceramic	AA
⚠ C908	VCKYCY1HB221K	V	220p 50V Ceramic	AA
⚠ C909	VCKYCY1HB332K	V	3300p 50V Ceramic	AA
⚠ C911	VCEAGA2AW106M	V	10 100V Electrolytic	AC
⚠ C912	VCEAGA1VW477M	V	470 35V Electrolytic	AD
⚠ C913	VCEAGA1CW337M	V	330 16V Electrolytic	AC
⚠ C914	VCEAGA1HW226M	V	22 50V Electrolytic	AB
⚠ C916	VCEAGA0JW108M	V	1000 6.3V Electrolytic	AC
⚠ C917	VCEAGA0JW108M	V	1000 6.3V Electrolytic	AC
⚠ C918	VCKYCY1CF104Z	V	0.1 16V Ceramic	AA
⚠ C919	VCEAGA0JW107M	V	100 6.3V Electrolytic	AB
⚠ C921	VCKYCY0JF105Z	V	1 6.3V Ceramic	AB
⚠ C922	VCEAGA1VW477M	V	470 35V Electrolytic	AD
⚠ C923	VCKYCY1HF103Z	V	0.01 50V Ceramic	AA
⚠ C930	RC-QZA333TAYK	V	0.033 63V Mylar	AD
	or			
	VCQYTA1HM333K	V	Capacitor	AD
C951	VCKYCY1HF333Z	V	0.033 50V Ceramic	AA
C952	VCKYCY0JF105Z	V	1 6.3V Ceramic	AB
C953	VCEA9M1HW475M	V	4.7 50V Electrolytic	AB
C954	VCEA9M1HW105M	V	1 50V Electrolytic	AB
C957	VCEA9M0JW476M	V	47 6.3V Electrolytic	AB
C958	VCEA9M0JW476M	V	47 6.3V Electrolytic	AB
C971	VCEA9M1CW106M	V	10 16V Electrolytic	AB

DUNTK5470TE
MAIN Unit(Continued)

Ref. No.	Part No.	★	Description	Code
C991	VCEA9M1CW476M	V	47 16V Electrolytic (Except VC-a382u/A582U/ A5833U)	AB

RESISTORS

Ref. No.	Part No.	★	Description	Code
R101	VRS-CY1JF470J	V	47 1/16W Metal Oxide	AA
R103	VRS-CY1JF473J	V	47k 1/16W Metal Oxide	AA
R104	VRS-CY1JF681J	V	680 1/16W Metal Oxide	AA
R105	VRS-CY1JF681J	V	680 1/16W Metal Oxide	AA
R106	VRD-RA2BE822J	V	8.2k 1/8W Carbon (VC-A382U/A582U/A5833U)	AA
R107	VRS-CY1JF822J	V	8.2k 1/16W Metal Oxide (Except VC-A382U/A582U/ A5833U)	AA
R108	VRS-CY1JF103J	V	10k 1/16W Metal Oxide	AA
R109	VRS-CY1JF561J	V	560 1/16W Metal Oxide	AA
R110	VRS-CY1JF153J	V	15k 1/16W Metal Oxide	AA
R111	VRS-CY1JF153J	V	15k 1/16W Metal Oxide	AA
R166	VRS-CY1JF105J	V	1M 1/16W Metal Oxide (Except VC-A382U/A582U/ A5833U)	AA
R167	VRS-CY1JF104J	V	100k 1/16W Metal Oxide (Except VC-A382U/A582U/ A5833U)	AA
R168	VRS-CY1JF183J	V	18k 1/16W Metal Oxide (Except VC-A382U/A582U/ A5833U)	AA
R169	VRS-CY1JF103J	V	10k 1/16W Metal (Except VC-A382U/A582U/ A5833U)	
R170	VRS-CY1JF104J	V	100k 1/16W Metal Oxide (Except VC-A382U/A582U/ A5833U)	AA
R171	VRS-CY1JF222J	V	2.2k 1/16W Metal Oxide (Except VC-A382U/A582U/ A5833U)	AA
R172	VRS-CY1JF682J	V	6.8k 1/16W Metal Oxide (Except VC-A382U/A582U/ A5833U)	AA
R173	VRS-CY1JF682J	V	6.8k 1/16W Metal Oxide (Except VC-A382U/A582U/ A5833U)	AA
R174	VRS-CY1JF393J	V	39k 1/16W Metal Oxide (Except VC-A382U/A582U/ A5833U)	AA
R175	VRS-CY1JF473J	V	47k 1/16W Metal Oxide (Except VC-A382U/A582U/ A5833U)	AA
R176	VRS-CY1JF473J	V	47k 1/16W Metal Oxide (Except VC-A382U/A582U/ A5833U)	AA
R177	VRS-CY1JF392J	V	3.9k 1/16W Metal Oxide (Except VC-A382U/A582U/ A5833U)	AA
R178	VRS-CY1JF332J	V	3.3k 1/16W Metal Oxide (Except VC-A382U/A582U/ A5833U)	AA
R179	VRS-CY1JF333J	V	33k 1/16W Metal Oxide (Except VC-A382U/A582U/ A5833U)	AA
R180	VRS-CY1JF103J	V	10k 1/16W Metal Oxide (Except VC-A382U/A582U/ A5833U)	AA
R181	VRS-CY1JF223J	V	22k 1/16W Metal Oxide (Except VC-A382U/A582U/ A5833U)	AA
R201	VRS-CY1JF682J	V	6.8k 1/16W Metal Oxide	AA
R202	VRS-CY1JF182J	V	1.8k 1/16W Metal Oxide	AA
R203	VRS-CY1JF332J	V	3.3k 1/16W Metal Oxide	AA
R207	VRD-RA2BE101J	V	100 1/8W Carbon	AB
R208	VRS-CY1JF272J	V	2.7k 1/16W Metal Oxide	AA
R209	VRS-CY1JF331J	V	330 1/16W Metal Oxide	AA
R210	VRS-CY1JF182J	V	1.8k 1/16W Metal Oxide	AA
R211	VRS-CY1JF822J	V	8.2k 1/16W Metal Oxide	AA
R212	VRS-CY1JF681J	V	680 1/16W Metal Oxide	AA
R213	VRS-CY1JF822J	V	8.2k 1/16W Metal Oxide	AA
R214	VRS-CY1JF104J	V	100k 1/16W Metal Oxide	AA
R216	VRS-CY1JF102J	V	1k 1/16W Metal Oxide	AA
R217	VRS-CY1JF681J	V	680 1/16W Metal Oxide	AA
R218	VRS-CY1JF471J	V	470 1/16W Metal Oxide	AA
R219	VRS-CY1JF561J	V	560 1/16W Metal Oxide	AA
R220	VRS-CY1JF272J	V	2.7k 1/16W Metal Oxide	AA
R221	VRS-CY1JF103J	V	10k 1/16W Metal Oxide	AA
R222	VRD-RA2BE102J	V	1k 1/8W Carbon	AA
R225	VRD-RA2BE750J	V	75 1/8W Carbon	AA
R226	VRS-CY1JF101J	V	100 1/16W Metal Oxide	AA
R227	VRS-CY1JF750J	V	75 1/16W Metal Oxide	AA
R228	VRS-CY1JF750J	V	75 1/16W Metal Oxide (VC-H9833U)	AA
R229	VRS-CY1JF101J	V	100 1/16W Metal Oxide (VC-A5833U/H9833U)	AA
R232	VRS-CY1JF153J	V	15k 1/16W Metal Oxide	AA
R233	VRS-CY1JF153J	V	15k 1/16W Metal Oxide	AA
R235	VRS-CY1JF750J	V	75 1/16W Metal Oxide (VC-A5833U)	AA
R252	VRD-RA2EE331J	V	330 1/4W Carbon	AA
R253	VRS-CY1JF101J	V	100 1/16W Metal Oxide	AA
R254	VRS-CY1JF101J	V	100 1/16W Metal Oxide	AA
R255	VRS-CY1JF000J	V	0 1/16W Metal Oxide	AA
R256	VRS-CY1JF183J	V	18k 1/16W Metal Oxide	AA
R301	VRS-CY1JF473J	V	47k 1/16W Metal Oxide (Except VC-A382U)	AA
R304	VRS-CY1JF000J	V	0 1/16W Metal Oxide	AA
R351	VRS-CY1JF473J	V	47k 1/16W Metal Oxide (Except VC-A382U/A582U/ A5833U)	AA
R352	VRS-CY1JF473J	V	47k 1/16W Metal Oxide (Except VC-A382U/A582U/ A5833U)	AA

DUNTK5470TE
MAIN Unit(Continued)

Ref. No.	Part No.	★	Description	Code
R353	VRS-CY1JF272J	V	2.7k 1/16W Metal Oxide (Except VC-A382U/A582U/A5833U)	AA
R354	VRS-CY1JF471J	V	470 1/16W Metal Oxide (Except VC-A382U/A582U/A5833U)	AA
R501	VRS-CY1JF102J	V	1k 1/16W Metal Oxide	AA
R502	VRS-CY1JF273J	V	27k 1/16W Metal Oxide	AA
R503	VRS-CY1JF472J	V	4.7k 1/16W Metal Oxide	AA
R505	VRS-CY1JF000J	V	0 1/16W Metal Oxide	AA
R601	VRS-CY1JF822J	V	8.2k 1/16W Metal Oxide	AA
R602	VRS-CY1JF274J	V	270k 1/16W Metal Oxide	AA
R603	VRS-CY1JF221J	V	220 1/16W Metal Oxide	AA
R604	VRS-CY1JF473J	V	47k 1/16W Metal Oxide	AA
R605	VRS-CY1JF153J	V	15k 1/16W Metal Oxide	AA
R606	VRS-CY1JF273J	V	27k 1/16W Metal Oxide	AA
R607	VRS-CY1JF561J	V	560 1/16W Metal Oxide	AA
R608	VRS-CY1JF472J	V	4.7k 1/16W Metal Oxide	AA
R609	VRS-CY1JF333J	V	33k 1/16W Metal Oxide (VC-A382U/A582U/A5833U)	AA
R610	VRS-CY1JF183J	V	18k 1/16W Metal Oxide (VC-A382U/A582U/A5833U)	AA
R611	VRS-CY1JF153J	V	15k 1/16W Metal Oxide (Except VC-A382U/A582U/A5833U)	AA
R611	VRS-CY1JF393J	V	39k 1/16W Metal Oxide (Except VC-A382U/A582U/A5833U)	AA
R612	VRS-CY1JF683J	V	68k 1/16W Metal Oxide (Except VC-A382U/A582U/A5833U)	AA
R612	VRS-CY1JF123J	V	12k 1/16W Metal Oxide (VC-A382U/A582U/A5833U)	AA
R613	VRS-CY1JF393J	V	39k 1/16W Metal Oxide (VC-A5833U)	AA
R614	VRS-CY1JF123J	V	12k 1/16W Metal Oxide (VC-A5833U)	AA
R615	VRS-CY1JF222J	V	2.2k 1/16W Metal Oxide (VC-A382U/A582U/A5833U)	AA
R616	VRS-CY1JF103J	V	10k 1/16W Metal Oxide (VC-A382U/A582U/A5833U)	AA
R617	VRS-CY1JF103J	V	10k 1/16W Metal Oxide (Except VC-A382U/A582U/A5833U)	AA
R618	VRS-CY1JF563J	V	56k 1/16W Metal Oxide	AA
R619	VRS-CY1JF470J	V	47 1/16W Metal Oxide	AA
R620	VRS-CY1JF153J	V	15k 1/16W Metal Oxide	AA
R621	VRD-RA2EE4R7J	V	4.7 1/4W Carbon	AA
R622	VRS-CY1JF102J	V	1k 1/16W Metal Oxide	AA
R623	VRD-RA2BE393J	V	39k 1/8W Carbon	AA
R624	VRD-RA2BE224J	V	220k 1/8W Carbon	AA
R625	VRS-CY1JF000J	V	0 1/16W Metal Oxide	AA
R626	VRS-CY1JF000J	V	0 1/16W Metal Oxide (VC-A382U/A582U/A5833U)	AA
R627	VRS-CY1JF000J	V	0 1/16W Metal Oxide (VC-A382U/A582U/A5833U)	AA
R628	VRS-CY1JF181J	V	180 1/16W Metal Oxide (Except VC-A382U/A582U/A5833U)	AA
R628	VRS-CY1JF000J	V	0 1/16W Metal Oxide (VC-A382U/A582U/A5833U)	AA
R629	VRD-RA2BE181J	V	180 1/8W Carbon (Except VC-A382U/A582U/A5833U)	AA
R651	VRS-CY1JF273J	V	27k 1/16W Metal Oxide (Except VC-A382U/A582U/A5833U)	AA
R652	VRS-CY1JF472J	V	4.7k 1/16W Metal Oxide (Except VC-A382U/A582U/A5833U)	AA
R653	VRS-CY1JF473J	V	47k 1/16W Metal Oxide (Except VC-A382U/A582U/A5833U)	AA
R654	VRS-CY1JF822J	V	8.2k 1/16W Metal Oxide (Except VC-A382U/A582U/A5833U)	AA
R655	VRS-CY1JF473J	V	47k 1/16W Metal Oxide (VC-H9833U)	AA
R656	VRS-CY1JF822J	V	8.2k 1/16W Metal Oxide (VC-H9833U)	AA
R657	VRS-CY1JF821J	V	820 1/16W Metal Oxide (Except VC-A382U/A582U/A5833U)	AA
R658	VRS-CY1JF682J	V	6.8k 1/16W Metal Oxide (Except VC-A382U/A582U/A5833U)	AA
R661	VRD-RA2BE273J	V	27k 1/8W Carbon (Except VC-A382U/A582U/A5833U)	AA
R662	VRS-CY1JF472J	V	4.7k 1/16W Metal Oxide (Except VC-A382U/A582U/A5833U)	AA
R663	VRD-RA2BE473J	V	47k 1/8W Carbon (Except VC-A382U/A582U/A5833U)	AA
R664	VRS-CY1JF822J	V	8.2k 1/16W Metal Oxide (Except VC-A382U/A582U/A5833U)	AA
R665	VRD-RA2BE473J	V	47k 1/8W Carbon (VC-H9833U)	AA
R666	VRS-CY1JF822J	V	8.2k 1/16W Metal Oxide (VC-H9833U)	AA
R667	VRS-CY1JF821J	V	820 1/16W Metal Oxide (Except VC-A382U/A582U/A5833U)	AA
R668	VRS-CY1JF682J	V	6.8k 1/16W Metal Oxide (Except VC-A382U/A582U/A5833U)	AA

DUNTK5470TE
MAIN Unit(Continued)

Ref. No.	Part No.	★	Description			Code
R671	VRS-CY1JF123J	V	12k	1/16W	Metal Oxide	AA
			(Except VC-A382U/A582U/A5833U)			
R672	VRS-CY1JF472J	V	4.7k	1/16W	Metal Oxide	AA
			(Except VC-A382U/A582U/A5833U)			
R675	VRS-CY1JF103J	V	10k	1/16W	Metal Oxide	AA
			(Except VC-A382U/A582U/A5833U)			
R676	VRS-CY1JF000J	V	0	1/16W	Metal Oxide	AA
			(Except VC-A382U/A582U/A5833U)			
R677	VRS-CY1JF000J	V	0	1/16W	Metal Oxide	AA
			(Except VC-A382U/A582U/A5833U)			
R701	VRS-CY1JF103J	V	10k	1/16W	Metal Oxide	AA
R703	VRD-RA2BE102J	V	1k	1/8W	Carbon	AA
R704	VRD-RA2BE102J	V	1k	1/8W	Carbon	AA
R705	VRD-RA2BE102J	V	1k	1/8W	Carbon	AA
R706	VRS-CY1JF153J	V	15k	1/16W	Metal Oxide	AA
R707	VRS-CY1JF153J	V	15k	1/16W	Metal Oxide	AA
R708	VRS-CY1JF471J	V	470	1/16W	Metal Oxide	AA
R709	VRS-CY1JF102J	V	1k	1/16W	Metal Oxide	AA
			(Except VC-A5833U)			
R710	VRS-CY1JF224J	V	220k	1/16W	Metal Oxide	AA
R711	VRS-CY1JF472J	V	4.7k	1/16W	Metal Oxide	AA
R712	VRS-CY1JF473J	V	47k	1/16W	Metal Oxide	AA
R714	VRD-RA2BE332J	V	3.3k	1/8W	Carbon	AA
R715	VRD-RA2BE102J	V	1k	1/8W	Carbon	AA
R716	VRS-CY1JF102J	V	1k	1/16W	Metal Oxide	AA
R717	VRD-RA2BE681J	V	680	1/8W	Carbon	AA
R718	VRS-CY1JF182J	V	1.8k	1/16W	Metal Oxide	AA
R719	VRD-RA2BE102J	V	1k	1/8W	Carbon	AA
R720	VRD-RA2BE103J	V	10k	1/8W	Carbon	AA
R721	VRD-RA2BE822J	V	8.2k	1/8W	Carbon	AA
			(VC-A382U/A582U/A5833U)			
R722	VRD-RA2BE102J	V	1k	1/8W	Carbon	AA
R726	VRD-RA2BE103J	V	10k	1/8W	Carbon	AA
R727	VRD-RA2EE151J	V	150	1/4W	Carbon	AA
R728	VRS-CY1JF102J	V	1k	1/16W	Metal Oxide	AA
R731	VRS-CY1JF103J	V	10k	1/16W	Metal Oxide	AA
R732	VRS-CY1JF153J	V	15k	1/16W	Metal Oxide	AA
R734	VRS-CY1JF223J	V	22k	1/16W	Metal Oxide	AA
R735	VRS-CY1JF393J	V	39k	1/16W	Metal Oxide	AA
R736	VRS-CY1JF183J	V	18k	1/16W	Metal Oxide	AA
R737	VRS-CY1JF102J	V	1k	1/16W	Metal Oxide	AA
R738	VRD-RA2BE104J	V	100k	1/8W	Carbon	AA
R739	VRD-RA2BE271J	V	270	1/8W	Carbon	AA
R740	VRS-CY1JF104J	V	100k	1/16W	Metal Oxide	AA
R741	VRD-RA2BE271J	V	270	1/8W	Carbon	AA
R742	VRS-CY1JF154J	V	150k	1/16W	Metal Oxide	AA
R743	VRD-RA2BE102J	V	1k	1/8W	Carbon	AA
R744	VRS-CY1JF154J	V	150k	1/16W	Metal Oxide	AA
R745	VRD-RA2BE102J	V	1k	1/8W	Carbon	AA
R746	VRS-CY1JF000J	V	0	1/16W	Metal Oxide	AA
R747	VRS-CY1JF103J	V	10k	1/16W	Metal Oxide	AA
R748	VRS-CY1JF103J	V	10k	1/16W	Metal Oxide	AA
R750	VRS-CY1JF474J	V	470k	1/16W	Metal Oxide	AA
R751	VRS-CY1JF123J	V	12k	1/16W	Metal Oxide	AA
R752	VRD-RA2BE123J	V	12k	1/8W	Carbon	AA
R753	VRS-CY1JF102J	V	1k	1/16W	Metal Oxide	AA
R754	VRD-RA2BE102J	V	1k	1/8W	Carbon	AA
R755	VRS-CY1JF000J	V	0	1/16W	Metal Oxide	AA
R760	VRS-CY1JF1R0J	V	1	1/16W	Metal Oxide	AA
R761	VRS-CY1JF1R0J	V	1	1/16W	Metal Oxide	AA
R770	VRS-CY1JF332J	V	3.3k	1/16W	Metal Oxide	AA
R773	VRS-CY1JF272J	V	2.7k	1/16W	Metal Oxide	AA
R781	VRD-RA2BE102J	V	1k	1/8W	Carbon	AA
R782	VRD-RA2BE102J	V	1k	1/8W	Carbon	AA
R783	VRD-RA2BE102J	V	1k	1/8W	Carbon	AA
			(Except VC-A382U/A582U/A5833U)			
R784	VRD-RA2BE102J	V	1k	1/8W	Carbon	AA
R790	VRS-CY1JF101J	V	100	1/16W	Metal Oxide	AA
R791	VRS-CY1JF101J	V	100	1/16W	Metal Oxide	AA
R792	VRD-RA2BE102J	V	1k	1/8W	Carbon	AA
			(VC-A5833U/H9833U)			
R793	VRD-RA2BE102J	V	1k	1/8W	Carbon	AA
			(Except VC-A5833U/H9833U)			
R801	VRS-CY1JF333J	V	33k	1/16W	Metal Oxide	AA
R802	VRS-CY1JF333J	V	33k	1/16W	Metal Oxide	AA
R809	VRS-CY1JF000J	V	0	1/16W	Metal Oxide	AA
R810	VRS-CY1JF103J	V	10k	1/16W	Metal Oxide	AA
R811	VRS-CY1JF102J	V	1k	1/16W	Metal Oxide	AA
R812	VRD-RA2BE102J	V	1k	1/8W	Carbon	AA
R813	VRS-CY1JF822J	V	8.2k	1/16W	Metal Oxide	AA
R814	VRS-CY1JF122J	V	1.2k	1/16W	Metal Oxide	AA
R815	VRS-CY1JF152J	V	1.5k	1/16W	Metal Oxide	AA
R821	VRS-CY1JF822J	V	8.2k	1/16W	Metal Oxide	AA
R822	VRS-CY1JF122J	V	1.2k	1/16W	Metal Oxide	AA
R823	VRS-CY1JF152J	V	1.5k	1/16W	Metal Oxide	AA
R824	VRS-CY1JF222J	V	2.2k	1/16W	Metal Oxide	AA
R825	VRS-CY1JF332J	V	3.3k	1/16W	Metal Oxide	AA
R826	VRS-CY1JF153J	V	15k	1/16W	Metal Oxide	AA
⚠ R902	VRC-UB2HG275K	V	2.7M	1/2W	Solid	AF
⚠ R903	VRD-RM2HD154J	V	150k	1/2W	Carbon	AA
⚠ R904	VRS-VV3DB333J	V	33k	2W	Metal Oxide	AA
⚠ R905	VRD-RM2HD390J	V	39	1/2W	Carbon	AA
⚠ R906	VRD-RA2BE562J	V	5.6k	1/8W	Carbon	AA
⚠ R907	VRD-RM2HD390J	V	39	1/2W	Carbon	AA
⚠ R911	VRS-CY1JF100J	V	10	1/16W	Metal Oxide	AA
⚠ R914	VRS-CY1JF221J	V	220	1/16W	Metal Oxide	AA
⚠ R915	VRS-CY1JF221J	V	220	1/16W	Metal Oxide	AA
⚠ R916	VRS-CY1JF472J	V	4.7k	1/16W	Metal Oxide	AA
⚠ R917	VRS-CY1JF103J	V	10k	1/16W	Metal Oxide	AA
⚠ R918	VRS-CY1JF183J	V	18k	1/16W	Metal Oxide	AA
⚠ R919	VRS-CY1JF392J	V	3.9k	1/16W	Metal Oxide	AA
⚠ R920	VRS-CY1JF682J	V	6.8k	1/16W	Metal Oxide	AA
⚠ R922	VRS-CY1JF221J	V	220	1/16W	Metal Oxide	AA

End of Main Unit

DUNTK5471TEV0
(VC-A382U/A582U/H982U/H983U/H9833U)
DUNTK5531CTEV0(VC-A5833U)
Operation Unit

Ref. No.	Part No.	★	Description	Code
⚠ R925	VRS-CY1JF000J	V	0 1/16W Metal Oxide	AA
R951	VRD-RM2HD152J	V	1.5k 1/2W Carbon	AA
R952	VRS-CY1JF223J	V	22k 1/16W Metal Oxide	AA
R954	VRS-CY1JF561J	V	560 1/16W Metal Oxide	AA
R955	VRS-CY1JF103J	V	10k 1/16W Metal Oxide	AA
R957	VRD-RA2BE472J	V	4.7k 1/8W Carbon	AA
R958	VRD-RA2EE182J	V	1.8k 1/4W Carbon	AA
R959	VRD-RA2BE103J	V	10k 1/8W Carbon	AA
R960	VRN-VV3DB3R3J	V	3.3 2W Metal Film	AB
R961	VRD-RA2EE182J	V	1.8k 1/4W Carbon	AA
R962	VRS-CY1JF103J	V	10k 1/16W Metal Oxide	AA
R973	VRS-CY1JF103J	V	10k 1/16W Metal Oxide	AA
R974	VRS-CY1JF472J	V	4.7k 1/16W Metal Oxide	AA
R991	VRS-CY1JF102J	V	1k 1/16W Metal Oxide	AA
R992	VRS-CY1JF103J	V	10k 1/16W Metal Oxide	AA
R993	VRS-CY1JF222J	V	2.2k 1/16W Metal Oxide	AA

SWITCHES

S101	QSW-S0004AJZZ	V	Switch, RF CONVERTOR	AF
S806	QSW-K0002AJZZ	V	Switch, CH +	AD
S807	QSW-K0002AJZZ	V	Switch, MENU	AD
S808	QSW-K0002AJZZ	V	Switch (VC-H9833U)	AD
S809	QSW-K0002AJZZ	V	Switch, SET	AD
S810	QSW-K0002AJZZ	V	Switch, CH – (Except VC-H9833U)	AD
S811	QSW-K0002AJZZ	V	Switch, EJECT (Except VC-H9833U)	AD
S812	QSW-K0002AJZZ	V	Switch, EJect (VC-H9833U)	AD
S813	QSW-K0002AJZZ	V	Switch, POWER	AD

MISCELLANEOUS PARTS

⚠ ACC901	QACCD3045AJZZ	V	AC Cord	AL
FB201	RBLN-0036CEZZ	V	Ferrite Bead	AB
FB701	RBLN-0036CEZZ	V	Ferrite Bead	AB
FB702	RBLN-0036CEZZ	V	Ferrite Bead	AB
FB703	RBLN-0036CEZZ	V	Ferrite Bead	AB
⚠ FB901	RBLN-0036CEZZ	V	Ferrite Bead	AB
⚠ FB902	RBLN-0036CEZZ	V	Ferrite Bead	AB
⚠ FH901	QFSHD1013CEZZ	V	Fuse Holder	AC
⚠ FH902	QFSHD1014CEZZ	V	Fuse Holder	AC
⚠ F901	QFS-B1625CEZZ	V	Fuse 1.6A, 125V	AC
J201	QJAKL0006AJZZ	V	Jack	AL
J201	QJAKH0011AJZZ	V	Jack (A382U/A582U/A5833U)	AK
J202	QJAKG0005AJZZ	V	Jack(VC-H9833U)	AN
J202	QJAKF0011AJZZ	V	Jack(VC-A5833U)	AM
P161	QPLGN0361CEZZ	V	Plug (Except VC-A382U/A582U/A5833U)	AB
P164	QPLGN0261CEZZ	V	Plug (Except VC-A382U/A582U/A5833U)	AB
P168	QPLGN0261CEZZ	V	Plug (Except VC-A382U/A582U/A5833U)	AB
P201	QPLGN0447REZZ	V	Plug	AA
P704	QPLGZ0883GEZZ	V	Plug	AD
P801	QPLGN0261CEZZ	V	Plug	AB
RMC801	RRMCU0056GEZZ	V	Remote Receiver	AQ
SC301	QSOCN0911REN1	V	Socket (Except VC-A383U/A582U/A5833U)	AD
SC301	QSOCN0611REN1	V	Socket (VC-A582U/A5833U)	AD
SC301	QSOCN0499REZZ	V	Socket(VC-A382U) (VC-A582U/A5833U)	AC
SC601	QSOCN0604REN1	V	Socket	AB
SC602	QSOCZ0293GEZZ	V	Socket	AC
SC701	QSOCN0704REN1	V	Socket	AB
SC702	QSOCZ0292GEZZ	V	Socket	AC
SC705	QSOCZ0625CEZZ	V	Socket	AC

—— End of Main Unit ——

DUNTK5471TEV0 (VC-A382U/A582U/H982U/H983U/H9833U) DUNTK5531CTEV0(VC-A5833U) Operation Unit

RESISTORS

R881	VRS-CY1JF222J	V	2.2k 1/16W Metal Oxide	AA
R882	VRS-CY1JF332J	V	3.3k 1/16W Metal Oxide	AA
R883	VRS-CY1JF472J	V	4.7k 1/16W Metal Oxide	AA

MISCELLANEOUS PARTS

S881	QSW-Z0001AJZZ	V	Switch, SHUTTLE	AQ
S882	QSW-K0002AJZZ	V	Switch, PLAY	AD
S883	QSW-K0002AJZZ	V	Switch, STOP	AD
S884	QSW-K0002AJZZ	V	Switch, REC	AD
S885	QSW-K0002AJZZ	V	Switch, PAUSE/STILL	AD
P881	QPLGZ0626CEZZ	V	Plug, 6pin	AF

—— End of Operation Unit ——

MECHANISM CHASSIS

Ref. No.	Part No.	★	Description	Code
1	LBNDK1011AJZZ	V	Tension Band Ass'y	AH
2	LBOSZ1007AJZZ	V	Tension Arm boss	AD
4	LBOSZ1006AJZZ	V	Cassette Stay L	AD
5	LCHSM0166AJZZ	V	Main Chassis Ass'y	BA
6	LHLDZ2016AJZZ	V	Loading Motor Block	AG
7	LPOLM0063GEZZ	J	Supply Pole Base Ass'y	AM
8	LPOLM0064GEZZ	J	Take-Up Pole Base Ass'y	AM
9	MLEVF0518AJZZ	V	Take-Up Loading Arm Ass'y	AF
10	MLEVF0519AJZZ	V	Supply Loading Arm Ass'y	AF
11	MLEVF0499AJZZ	V	Pinch Drive Lever Ass'y	AG
12	MLEVF0500GEZZ	J	Pinch Roller Lever Ass'y	AW
15	MLEVF0496AJZZ	V	Tension Arm Ass'y	AK
16	LANGF9620AJFW	V	A/C Head Plate	AG
17	MLEVP0271AJZZ	V	Sifter Drive Lever	AE
18	MLEVP0272AJZZ	V	Pinch Double Action Lever	AD
19	MLEVP0301AJZZ	V	Reverse Guide Lever Ass'y	AL
20	MLEVP0275AJZZ	V	Reverse Drive Lever	AD
21	MLEVP0292AJZZ	V	Slow Brake Lever	AE
22	MLEVP0290AJZZ	V	Open Lever	AD
23	MLEVP0293AJZZ	V	Clutch Lever	AE
24	MLEVP0294AJZZ	V	Sup Main Brake Ass'y	AF
25	MLEVP0295AJZZ	V	Take-Up Main Brake Ass'y	AF
26	CLEVP0287AJZZ	V	Auto Head Cleaner Ass'y (VC-A5833U/H983U/ H9833U)	AG
27	MSLiP0010AJZZ	V	Sifter	AH
29	MSPRD0175AJFJ	V	Reverse Guide Spring 2	AE
30	MSPRT0402AJFJ	V	Loading Double Action Spring	AE
31	MSPRT0403AJFJ	V	Pinch Double Action Spring	AD
32	MSPRC0213AJFJ	V	Earth Spring	AC
33	MSPRT0416AJFJ	V	Tension Spring	AD
34	NBLTK0067AJ00	V	Reel Belt	AE
35	NDAiV1078AJ00	V	Reel Disk	AE
36	NGERH1293AJZZ	V	Loading Connect Gear	AD
37	NGERH1295AJ00	V	Master Cam	AE
38	NGERH1294AJZZ	V	Casecon Drive Gear	AD
39	NGERH1270AJZZ	V	Take-Up Loading Gear	AF
40	NGERH1271AJZZ	V	Supply Loading Gear	AD
41	NGERH1272AJZZ	V	Pinch Drive Cam	AE
43	NGERH1299AJZZ	V	Reel Relay Gear	AE
44	NGERW1070AJZZ	V	Worm Gear	AD
45	NGERW1066AJZZ	V	Worm Wheel Gear	AD
46	NiDR-0018AJZZ	V	Idler Wheel Ass'y	AK
47	NPLYV0162AJZZ	V	Motor Pully	AD
48	NPLYV0163AJZZ	V	Limitter Pulley Ass'y	AM
49	NROLP0131GEZZ	J	Guide Roller	AL
50	NSFTP0032AJZZ	V	Tension Pole Adjuster	AB
51	MSPRC0217AJFJ	V	Guide Roller Spring	AC
52	PREFL1011AJZZ	V	Light Guide	AE
53	QCNW-0308AJZZ	V	FFC for Drum Motor	AG
55	QCNW-0272AJZZ	V	FFC for A/C Head	AF
56	QPWBF5469AJZZ	V	A/C Head PWB	AE
57	QSOCN0605REN1	V	Socket, 6 pin	AB
58	RHEDT0036AJZZ	V	Full Erase Head	AM
59	RHEDU0088GEZZ	J	A/C Head Ass'y	AV
60	RMOTM1078GEZZ	J	Loading Motor	AK
61	RMOTN2055GEZZ	J	Capstan Motor	BA
62	RMOTP1135GEZZ	J	Drum Drive Motor	AX
63	DDRMW0028TEX1	V	Upper and lower drum Ass'y(VC-A382U)	BP
63	DDRMW0029TEX1	V	Upper and lower drum Ass'y(VC-A582U/A5833U)	BU
63	DDRMW0030TEX1	V	Upper and lower drum Ass'y(VC-H982U/H983U/ H9833U)	BU
65	QBRSK0041GEZZ	J	Drum Earth Brush Ass'y	AD
66	XBPSD26P05J00	V	Drum Drive Motor Mounting Screw (SW2.6P+5S)	AA
67	PGiDC0056GEFW	J	Drum Base	AL
68	QPWBF5468AJZZ	V	PWB(LDG Motor)	AE
69	QPLGZ0292GEZZ	J	Socket(LDG Motor)	AE
70	MSPRC0223AJFJ	V	Azimuth Spring	AC
71	MSPRC0224AJFJ	V	Height Adjusting spring	AC

—— End of Mechanism Chassis ——

SCREW, NUTS AND WASHERS

Ref. No.	Part No.	★	Description	Code
201	XBPSD26P08000	V	Screw 2.6P+8S A/C Head	AA
202	LX-HZ3082GEZZ	J	A/C Head Screw	AD
203	XHPSD26P06000	V	Screw, C2.6P+6S (For Capstan Motor)	AA
207	XHPSD30P08WS0	V	Screw, C3.0P+8S (For Drum Base)	AA
208	XRESJ30-06000	V	E-Ring, E-3	AA
209	XWHJZ31-05052	V	Washer, W3.1-5.2-0.5	AC
210	XWHJZ31-03052	V	Washer, W3.1-5.2-0.3	AC
211	XWHJZ31-04052	V	Washer, W3.1-5.2-0.4	AC
212	XWHJZ31-06052	V	Washer, W3.1-5.2-0.6	AC
213	XWHJZ31-07052	V	Washer, W3.1-5.2-0.7	AC
214	PSPAP0009AJZZ	V	Reverse Guide Adjusting Nut	AB
216	LX-WZ1041GE00	J	CW 2.5-6-0.5 CAM	AA
218	XBPSD30P08J00	V	Drum Base Mounting Screw (SW 3P+8S)	AA
219	LX-WZ1098GE00	J	CW 2.6-4.7-10.5 RED	AB
220	LX-BZ3096GEFD	J	Tilt Adjusting Screw	AA
221	XBPSD26P06000	V	Azimuth Adjusting Screw 2.6+6S	AA
222	LX-BZ3197GEFD	J	Screw (A/C Head)	AD
223	XWHJZ31-08052	V	Washer, W3.1-5.2-0.8	AC

—— End of Screw, Nuts and Washers ——

CASSETTE HOUSING CONTROL

Ref. No.	Part No.	★	Description	Code
300	CHLDX3081TEV2	V	Cassette Housing Control Ass'y	AX
301	LANGF9592AJFW	V	Upper Plate	AL
302	LHLDX1028AJ00	V	Frame (L)	AH
303	LHLDX1032AJ00	V	Frame (R)	AH
304	LHLDX1030AJZZ	V	Holder (L)	AE
305	LHLDX1031AJZZ	V	Holder (R)	AE
306	MLEVF0469AJFW	V	Proof Lever (R)	AE
307	MLEVP0281AJ00	V	Door Open Lever	AD
308	MSLiF0076AJFW	V	Slider	AK
309	MSPRD0151AJFJ	V	Proof Lever (R) Spring	AB
310	MSPRD0166AJFJ	V	Drive Gear (R) Spring	AE
311	MSPRP0175AJFJ	V	Cassette Spring	AE
312	MSPRT0381AJFJ	V	Double Action Spring	AC
313	NGERH1278AJZZ	V	Drive Gear L	AE
314	NGERH1309AJZZ	V	Drive Gear R	AE
315	NGERR1008AJ00	V	Double Action Rack Gear	AE
316	NGERR3005AJFW	V	Drive Angle Gear	AG
317	NSFTD0041AJFD	V	Main Shaft	AH

—— End of Cassette Housing Control ——

MECHANICAL PARTS

Ref. No.	Part No.	★	Description	Code
600	GCABA1092AJKB	V	Top Cabinet	AQ
602	GCABB1185AJKB	V	Main Frame	AQ
603	PSLDM4539AJFW	V	Drum Shield	AH
604	XHPSD26P06WS0	V	Screw	AA
605	XHPSD30P06WS0	V	Screw	AA
607	XEPSD30P14XS0	V	Screw	AB
608	GCOVA2072AJKZ	V	Antenna Terminal Cover (VC-A382U/A582U/A5833U)	AE
608	GCOVA2073AJKZ	V	Antenna Terminal Cover (VC-H982U/H983U/H9833U)	AE
609	XEBSD30P12000	V	Screw	AA
610	LX-HZ3087GEFN	V	Screw	AB
612	LHLDZ1962AJ00	V	Sensor LED Cover	AD
613	PGUMS0026AJZZ	V	Foot Felt	AB
614	TLABM3853AJZZ	V	Model Label(VC-A382U)	AC
614	TLABM3700AJZZ	V	Model Label(VC-A382UC)	AC
614	TLABM3709AJZZ	V	Model Label(VC-A582U)	AC
614	TLABM3710AJZZ	V	Model Label(VC-A5833U)	AC
614	TLABM3713AJZZ	V	Model Label(VC-H982U)	AC
614	TLABM3714AJZZ	V	Model Label(VC-H983U)	AC
614	TLABM3715AJZZ	V	Model Label(VC-H9833U)	AC
615	XJPSD30P10WS0	V	Screw	AA

—— End of Machanical Parts ——

FRONT PANEL PARTS

Ref. No.	Part No.	★	Description	Code
501	CPNLC2327TEV1	V	Front Panel Ass'y (VC-A582U)	AU
501	CPNLC2345TEV0	V	Front Panel Ass'y (VC-H982U)	AY
501	CPNLC2350TEV0	V	Front Panel Ass'y (VC-A382U)	AW
501	CPNLC2351TEV0	V	Front Panel Ass'y (VC-A5833U)	AS
501	CPNLC2354TEV0	V	Front Panel Ass'y (VC-H983U)	AX
501	CPNLC2355TEV0	V	Front Panel Ass'y (VC-H9833U)	AX
501-1	*Not Available*	V	Front Panel (VC-A582U)	-
501-1	*Not Available*	V	Front Panel (VC-H982U)	-
501-1	*Not Available*	V	Front Panel (VC-A382U)	-
501-1	*Not Available*	V	Front Panel (VC-A5833U)	-
501-1	*Not Available*	V	Front Panel (VC-H983U)	-
501-1	*Not Available*	V	Front Panel (VC-H9833U)	-
501-2	HBDGB1008AJSA	V	SHARP Badge	AE
501-3	HDECQ1756AJSA	V	Cassette Flap (VC-A582U/A5833U)	AG
501-3	HDECQ1783AJSA	V	Cassette Flap (VC-A382U)	
501-3	HDECQ1773AJSA	V	Cassette Flap (VC-H982U/H983U)	AG
501-3	HDECQ1892AJSA	V	Cassette Flap (VC-H9833U)	AG
501-4	HDECQ1757AJSA	V	Window Dec. (VC-A382U/A582U/A5833U)	AL
501-4	HDECQ1774AJSA	V	Window Dec. (VC-H982U/H983U)	AL
501-4	HDECQ1790AJSA	V	Window Dec. (VC-H9833U)	AK
501-5	JBTN-2844AJSC	V	Button, REC (VC-A382U/A582U/A5833U)	AD
501-5	JBTN-2849AJSB	V	Button, REC (VC-H982U/H983U)	AD
501-5	JBTN-2881AJSB	V	Button, REC (VC-H9833U)	AF
501-6	JBTN-2854AJSA	V	Button, SET/UP (VC-H982U/H983U)	AD
501-6	JBTN-2858AJSA	V	Button, SET/UP (VC-H9833U)	AD
501-7	MSPRD0103AJFJ	V	Cassette Spring	AB
501-8	HDECQ1761AJSA	V	Flap Dec. (VC-H982U/H983U)	AD

Ref. No.	Part No.	★	Description	Code
501-10	JBTN-2880AJSB	V	Button, POWER (VC-H9833U)	AE
502	LHLDZ2015AJZZ	V	Button Holder (Except VC-H9833U)	AE
502	LHLDZ2021AJZZ	V	Button Holder (VC-H9833U)	AE
503	JBTN-2845AJSB	V	Button, PLAY/STOP	AF
504	JKNBK1105AJSB	V	Dial (Except VC-H9833U)	AF
504	JKNBK1106AJSB	V	Dial (VC-H9833U)	AF
505	TLABZ1532AJZZ	V	Feature Label	AF
506	HDECQ1797AJSB	V	Ring Dec. (VC-H9833U)	AE

—— End of Front Panel Parts ——

SUPPLIED ACCESSORIES

ACCESSORIES

Ref. No.	Part No.	★	Description	Code
	QCNW-0298AJZZ	V	75 ohm Coaxial Cable	AK
	RRMCG0235AJSA	V	Infrared Remote Control Unit(VC-A382U/A582U/ H982U)	AZ
	RRMCG0236AJSA	V	Infrared Remote Control Unit(VC-A5833U/H9833U)	AX
	RRMCG0238AJSA	V	Infrared Remote Control Unit(VC-H983U)	AZ
	90A64EC2078A	V	Battery Cover, Infrared Remote Control	AF
	TiNS-3430AJZZ	V	Operation Manual (VC-A382U)	AG
	TiNS-3440AJZZ	V	Operation Manual (VC-A382UC/H9833U)	AH
	TCADH0039AJZZ	V	Timer Card (VC-A382U:SEC)	AC
	TCADH0041AJZZ	V	Timer Card (Except VC-A382U:SEC)	AC

ACCESSORIES(*NOT REPLACEMENT ITEM*)

Ref. No.	Part No.	★	Description	Code
	TGAN-0001AJZZ	-	Guarantee Card (VC-A382U:SEC)	—

—— End of Supplied Accessories ——

PACKING PARTS
(NOT REPLACEMENT ITEM)

Ref. No.	Part No.	★	Description	Code
	SPAKC-3631AJZZ	-	Packing Case (VC-A582U)	—
	SPAKC-3632AJZZ	-	Packing Case (VC-H982U)	—
	SPAKC-3664AJZZ	-	Packing Case (VC-A5833U)	—
	SPAKC-3667AJZZ	-	Packing Case (VC-H983U)	—
	SPAKC-3668AJZZ	-	Packing Case (VC-H9833U)	—
	SPAKC-3833AJZZ	-	Packing Case (VC-A382U)	—
	SPAKX1003AJZZ	-	Packing Add.	

—— End of Packing Parts ——

11. EXPLODED VIEW OF MECHANICAL PARTS

MECHANISM CHASSIS PARTS

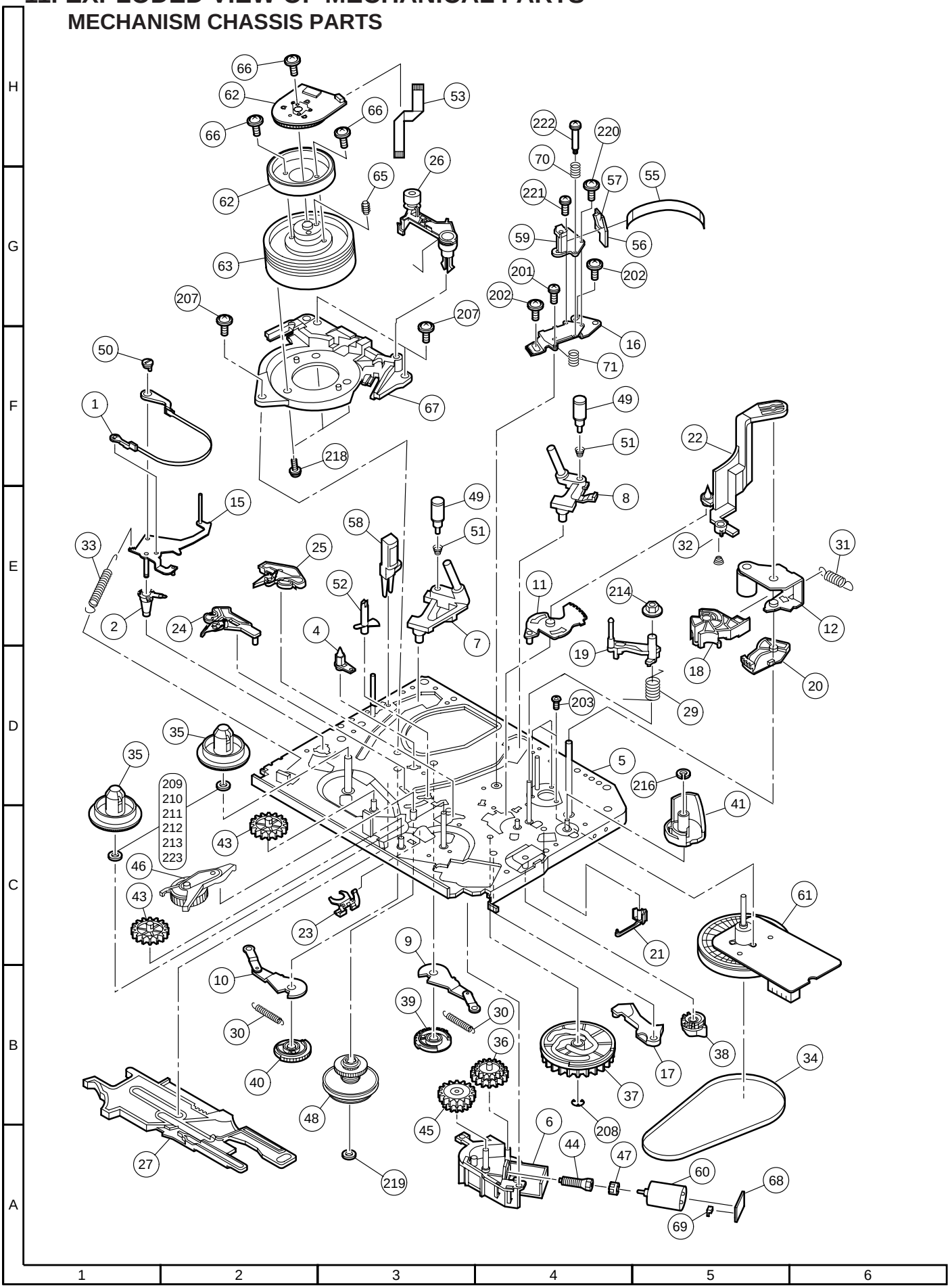

CASSETTE HOUSING CONTROL PARTS

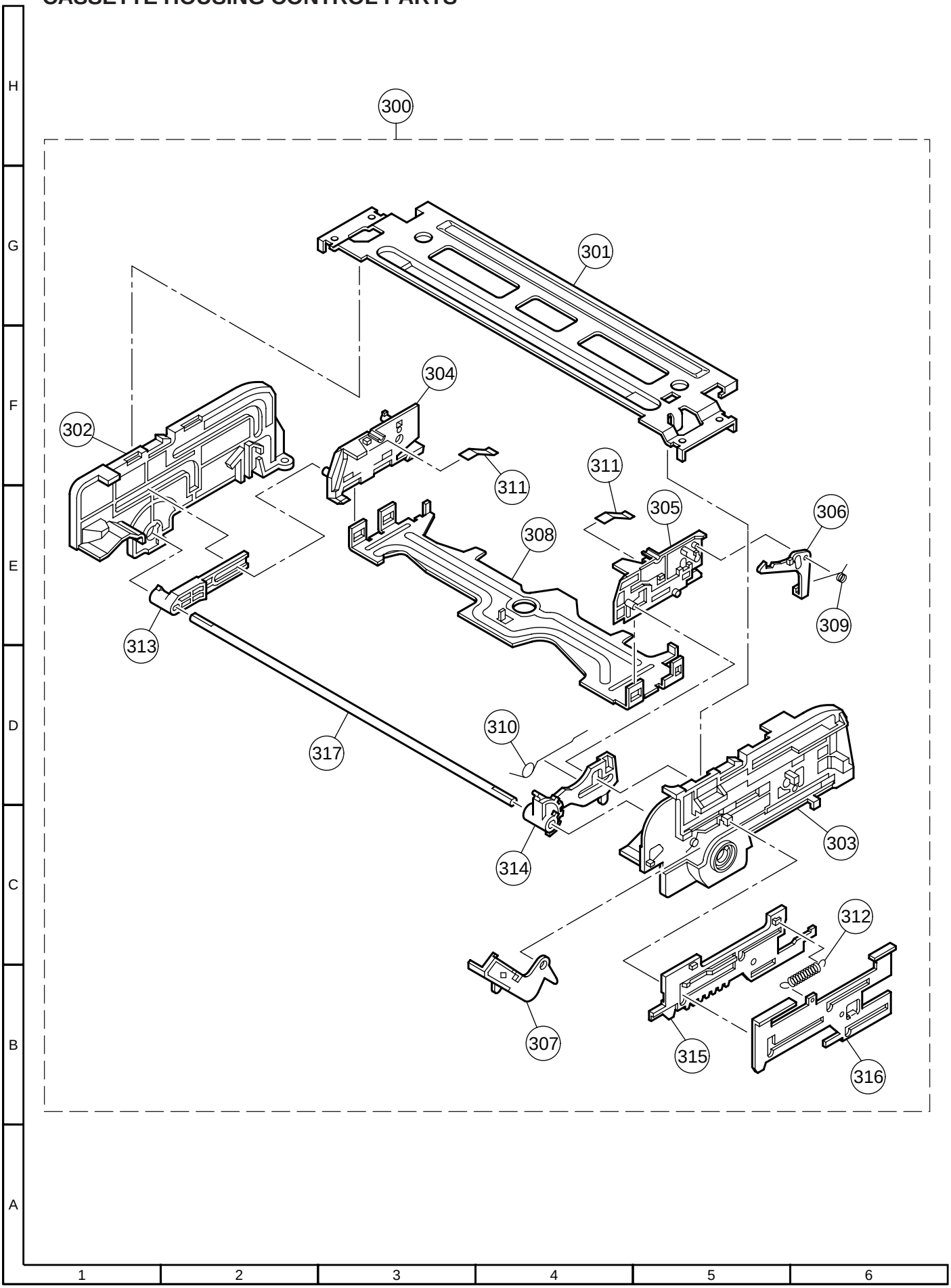

MECHANICAL PARTS

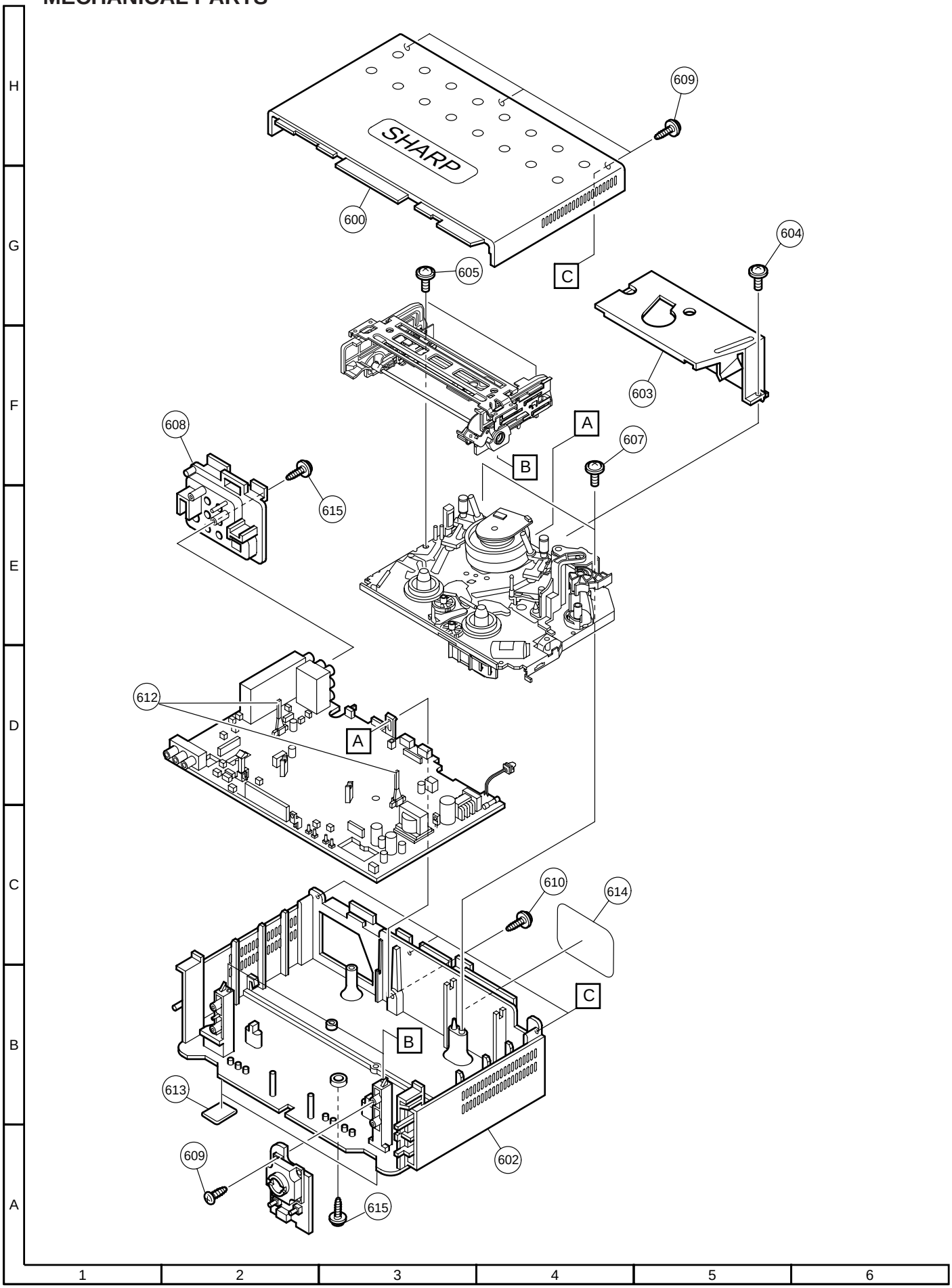

FRONT PANEL PARTS (VC-A382U/A582U/A5833U)

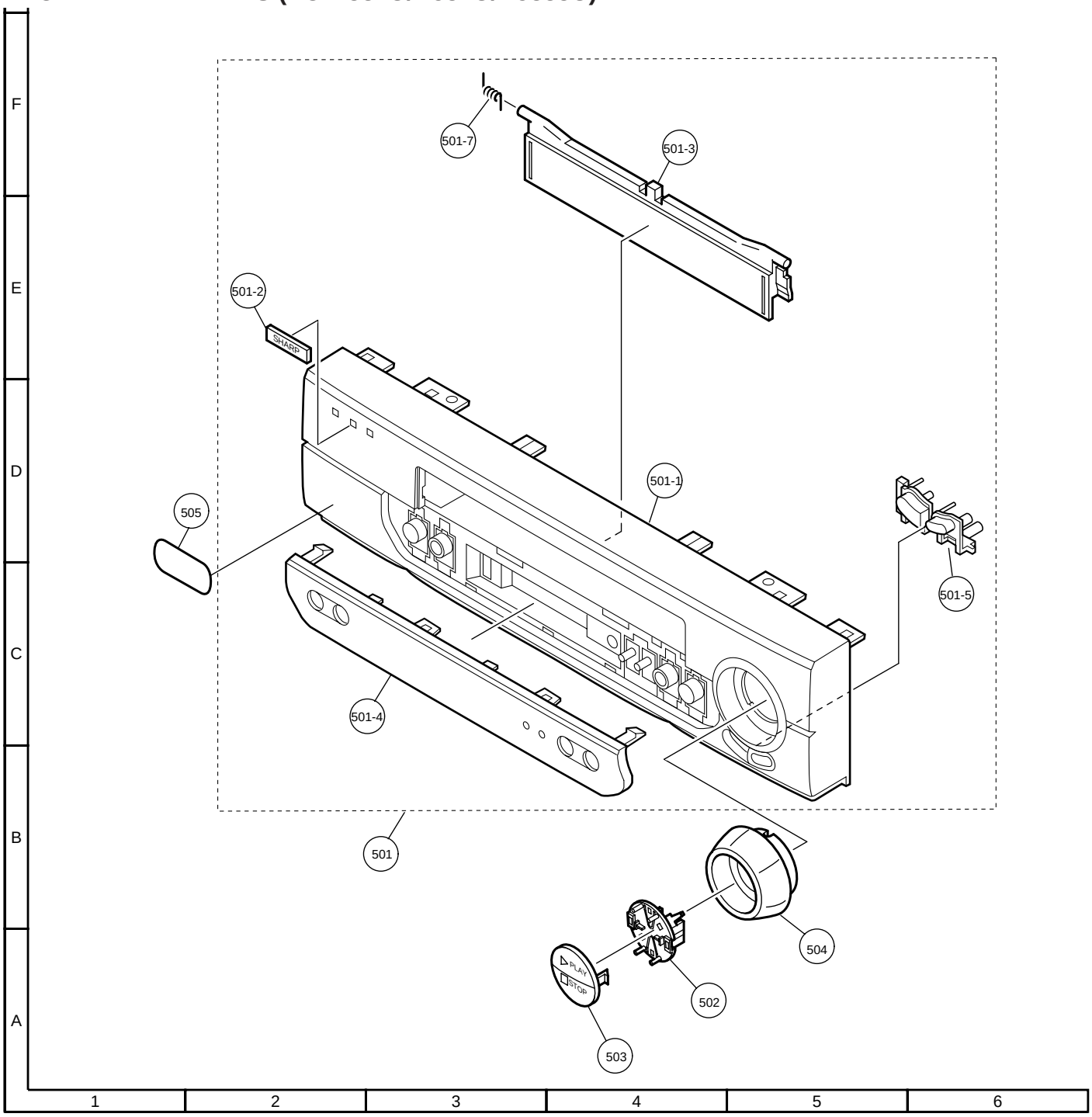

PRECAUTION ON FRONT PANEL SET-UP

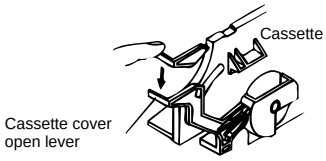

Before attaching the front panel in position, make sure that the cassette cover open lever is in its right place (lower-most). If it is out of position, push it down with a finger.

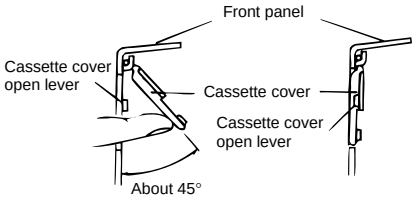

Keep the cassette over about 45° open and make sure that the cassette cover open lever is between the front panel and the cassette cover. Now fix the front panel in place.

Do not mount the front panel with the cassette cover tilted too open. Otherwise the cassette cover might wrongly run on the cassette housing.

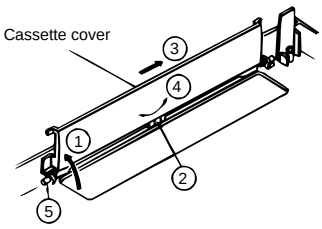

Removing the cassette compartment cover.
1 Open the cassette compartment cover fully.
2 Remove the center positioner.
3 Slide the cover to the right.
4 Slightly bend the cover.
5 Draw out the left-side rod.

FRONT PANEL PARTS (VC-H982U/H983U)

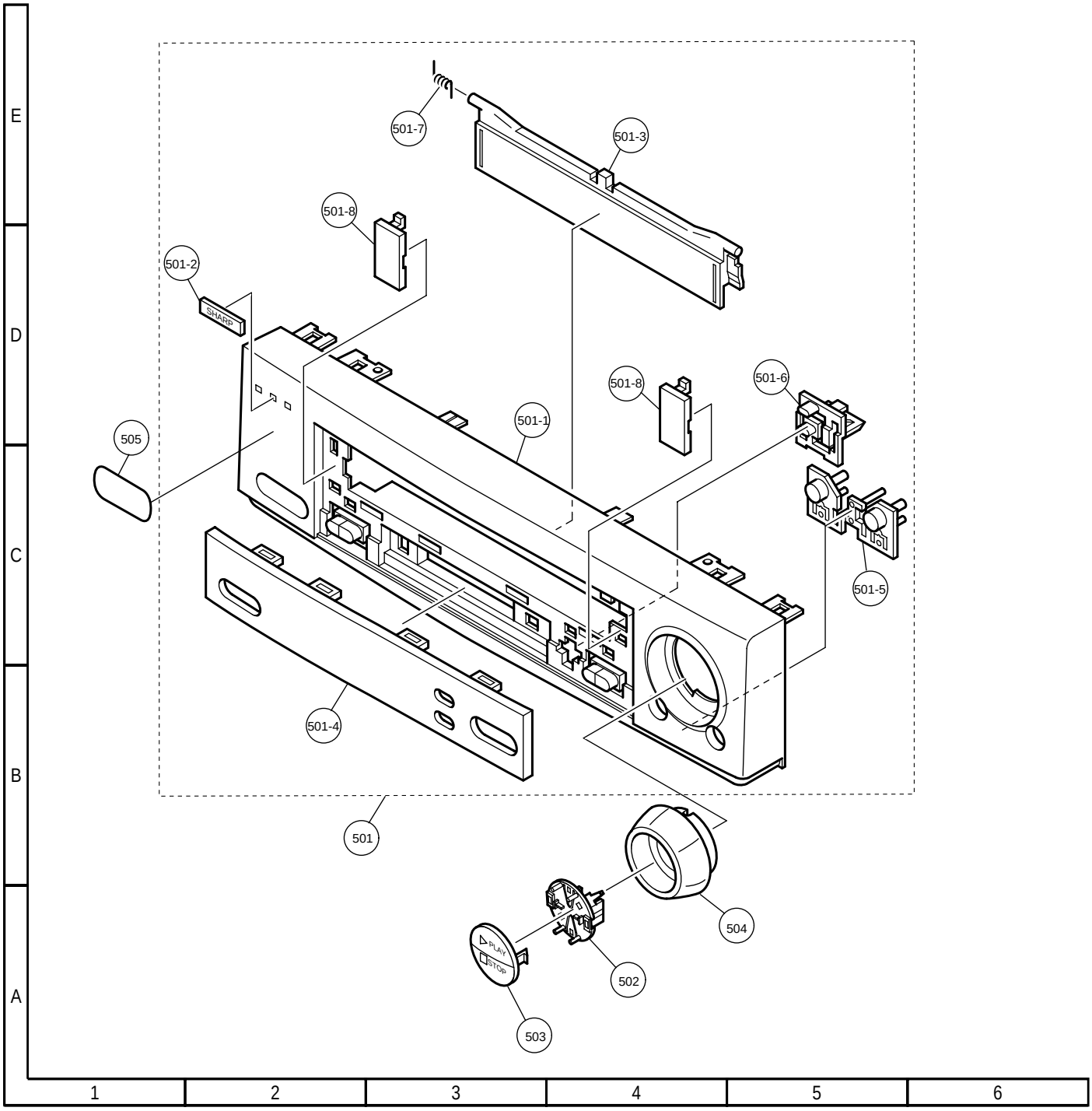

PRECAUTION ON FRONT PANEL SET-UP

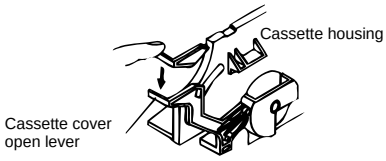

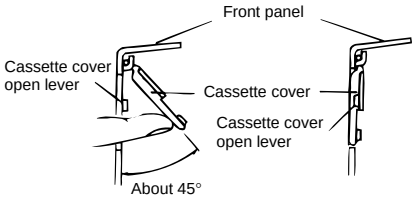

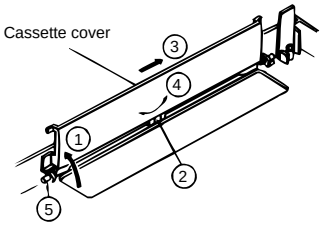

Before attaching the front panel in position, make sure that the cassette cover open lever is in its right place (lower-most). If it is out of position, push it down with a finger.

Keep the cassette over about 45° open and make sure that the cassette cover open lever is between the front panel and the cassette cover. Now fix the front panel in place.

Do not mount the front panel with the cassette cover tilted too open. Otherwise the cassette cover might wrongly run on the cassette housing.

Removing the cassette compartment cover.
1 Open the cassette compartment cover fully.
2 Remove the center positioner.
3 Slide the cover to the right.
4 Slightly bend the cover.
5 Draw out the left-side rod.

FRONT PANEL PARTS (VC-H9833U)

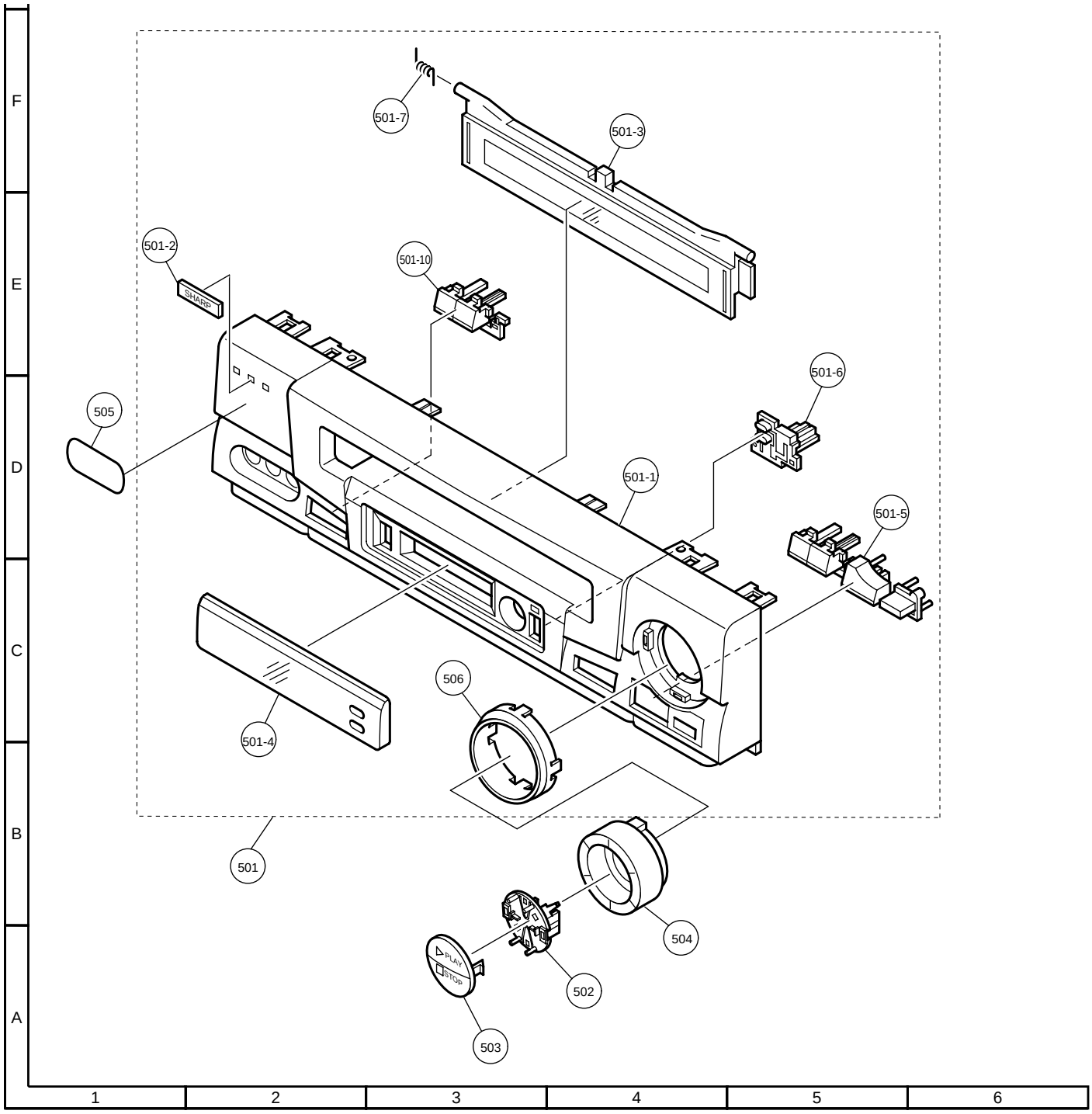

PRECAUTION ON FRONT PANEL SET-UP

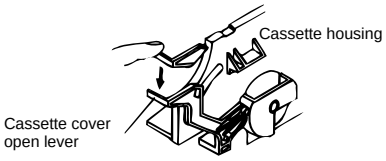

Before attaching the front panel in position, make sure that the cassette cover open lever is in its right place (lower-most). If it is out of position, push it down with a finger.

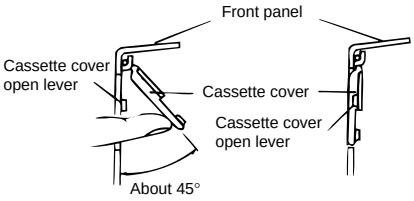

Keep the cassette over about 45° open and make sure that the cassette cover open lever is between the front panel and the cassette cover. Now fix the front panel in place.

Do not mount the front panel with the cassette cover tilted too open. Otherwise the cassette cover might wrongly run on the cassette housing.

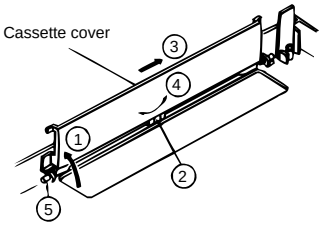

Removing the cassette compartment cover.
1 Open the cassette compartment cover fully.
2 Remove the center positioner.
3 Slide the cover to the right.
4 Slightly bend the cover.
5 Draw out the left-side rod.

12. PACKING OF THE SET

■ Setting position of the Knobs

RF conv. CH. preset	at "3" channel

Accessories

	TiNS-3430AJZZ	Operation Manual (VC-A382U)
	TiNS-3440AJZZ	Operation Manual (Except VC-A382U: SEC)
★	TGAN-0001AJZZ	Guarantee Card (VC-A382U: SEC)
★	TCADH0039AJZZ	Timer Card(VC-A382U: SEC)
★	TCADH0041AJZZ	Timer Card(Except VC-A382U: SEC)
	QCNW-0298AJZZ	75ohm Coaxial Cable

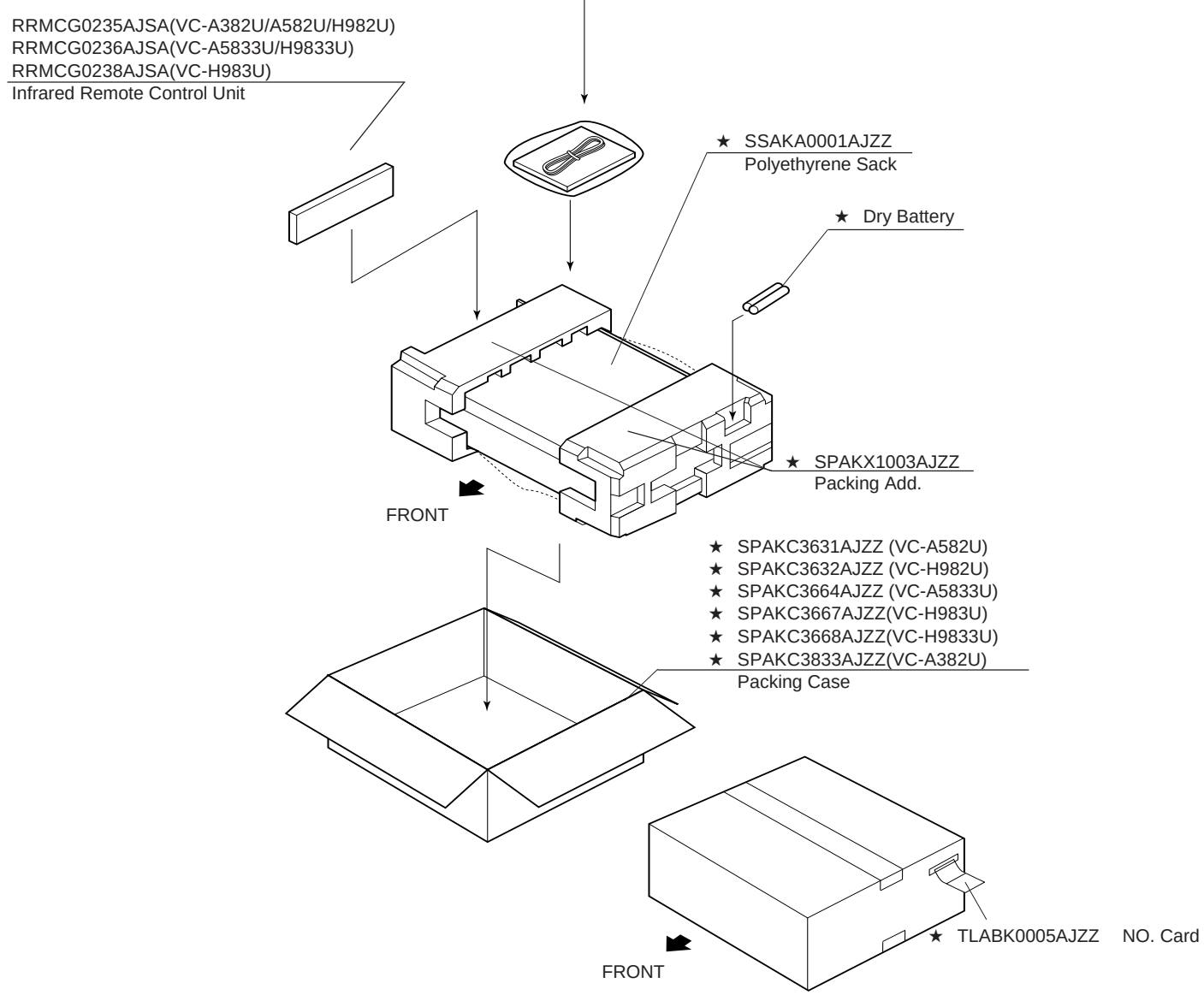

MARK ★ Not Replacement Item

SHARP

COPYRIGHT © 1998 BY SHARP CORPORATION

ALL RIGHTS RESERVED.

No part of this publication may be reproduced,
stored in a retrieval system, or transmitted in
any form or by any means, electronic, mechanical,
photocopying, recording, or otherwise, without
prior written permission of the publisher.

TQ -S
Mar. 1998 Printed in JAPAN
NA. NS

SHARP CORPORATION
AV Systems Group
Quality & Reliability Control Center
Yaita, Tochigi 329-2193, Japan